UL-AU CERTIFICATE

Certificate No.	UL-AU-230008
Page	1/97
Date of Issue	2024-10-02
Certificate Holder	Hilti (Aust.) Pty. Ltd 1G Homebush Bay Drive PO Box 3217 Rhodes NSW 2138
Manufacturer	Hilti AG, Feldkircherstrasse 100 FL-9494 Schaan Liechtenstein Internet: www.hilti.com
Production Sites (Factory)	Hilti Production Plant 4a
Certified Product Description	Firestopping Sealant
Model(s)	Hilti Firestop Intumescent Sealant CP 611A
Trade Name or Trademark	Hilti Firestop Intumescent Sealant CP 611A
Rating Information	Refer to Appendix's A to D
Standard tested to	AS 1530.4:2014 and AS 4072.1:2005
Test Report References	See page 95 to 97
Listing Category and File Ref	AUED.RS5418
Additional Information and Conditions	See page 2
Expiry date	2034-10-02

Stuart Foster
Certification Officer

This is to certify that representative samples of the Product described herein ("Certified Product") have been investigated and found in compliance with the Standard(s) indicated on this Certificate, in accordance with the UL-AU Mark Scheme requirements and JAS-ANZ accreditation requirements. The designated Certificate Holder is entitled to use the UL-AU Mark for the Certified Product manufactured at the production site(s) identified above, in accordance with the UL-AU Mark Scheme Service Agreement.
Only those Products bearing the UL-AU Mark for Australia should be considered as being covered by UL's UL-AU Mark Service. This certificate shall remain valid through to the expiration date, unless terminated earlier in accordance with the Service Agreement including without limitation if the Standard identified on this Certificate is amended or withdrawn prior to the expiration date.

This Certificate remains the property of UL International New Zealand Ltd.

If the client provides copies of the certification documents to others, the documents shall be reproduced in their entirety.

All dates are in Year-Month-Day format (YYYY-MM-DD).

JAS-ANZ

www.jas-anz.org/register

Certification Body

UL International New Zealand Limited
54 Tarndale Grove, Albany,
Auckland 0632, New Zealand.
+64 9 415 3355, customerservice.anz@ul.com,
https://au-nz.ul.com

APPENDIX - UL-AU CERTIFICATE

Additional Information:

This certificate is evidence that prototypes of the nominated products and their configurations as detailed in Appendix's A to D conform to the following parameters:

1. Have been tested to AS 1530.4:2014 and AS 4072.1:2005 or an equivalent or more severe test and the Fire Resistance Level (FRL) nominated in Appendix's A to D was achieved by the prototype for each nominated assembly of service penetration, building element and protection method configuration, without the assistance of an active fire suppression system.

2. Test results are detailed in a confidential test report that may be available from the certificate holder upon request. The information regarding the test parameters is included in the confidential technical file.

   (i) the method and conditions of the test;

   (ii) form of construction of the tested prototype; and

   (iii) that restraint complied with AS 1530.4.

3. Testing was conducted at multiple locations by suitably accredited laboratories that are accredited by a signatory to the International Accreditation Cooperation Mutual Recognition Arrangement (ILAC-MRA) as recognised by NATA who is also a signatory body to this Agreement. The data has been reviewed by UL against the relevant to accreditation schedules.

APPENDIX - UL-AU CERTIFICATE

Certificate No. UL-AU-230008
Page 3/97
Date of Issue 2024-10-02

The UL Enhanced Mark shall appear on certified products only and shall be used only in accordance with the UL-AU Mark Scheme Service Terms Minimum size is not specified, as long as the Mark is legible. The following are **examples** of the format.

The file number that replaces E123456 and NC12345 in the above examples is; **RS5418**

The following Supplementary Information shall be placed adjacent to the Certification Mark;

Firestopping – Intumescent Seals and Fire Pillows
AS 1530.4

The UL Enhanced Mark may appear on a label, nameplate, or may be cast, stamped or molded into the product. When appearing on a label or nameplate, the Manufacturer's name or trademark along with a model number are also required on that same label or nameplate. If cast, stamped or molded, the Manufacturer's name or trademark and model number shall also appear elsewhere on the product.
All content shall be in accordance with the details provided on this Certificate.

PROCUREMENT

The Production site may reproduce the Mark or obtain it from a UL authorized supplier. The list of UL authorized suppliers can be found on UL's online directory at www.ul.com.

Certification Body **UL International New Zealand Limited**
54 Tarndale Grove, Albany,
Auckland 0632, New Zealand.
+64 9 415 3355, customerservice.anz@ul.com,
https://au-nz.ul.com

APPENDIX - UL-AU CERTIFICATE

APPENDIX A

Conforming product configurations to achieve nominated FRL's

A.1 Specific Parts and Supporting Constructions for Hilti Firestop Intumescent Sealant CP 611A:

Technical description of product:

"Hilti Firestop Intumescent Sealant CP 611A" is a 1-component product used as a cable and/or pipe penetration seal.

Sealant	Characteristics
Hilti Firestop Intumescent Sealant CP 611A	Water-based 1-component acrylic sealant with intumescent fire protection additives and binder according to Annex C.1 of the UL-AU.

Hilti Firestop Intumescent Sealant CP 611A is identical to Hilti Firestop Intumescent Sealant CFS-IS

Additional component	Characteristics
Mineral wool backfilling material	Loose mineral wool products suitable as backfilling material according to Annex B.2 of the UL-AU.

Intended use:

"Hilti Firestop Intumescent Sealant CP 611A" is intended to be used as a mixed penetration seal to temporarily or permanently reinstate the fire resistance performance of flexible wall constructions, rigid wall constructions or rigid floor constructions where they have been provided with apertures which are penetrated by various cables, conduits, metal pipes and / or plastic pipes. For more details see Annex C of the UL-AU.

The maximum opening size of the penetration seal is w x h = 150 mm x 150 mm or circular openings of an equivalent maximum area in walls and floors.

"Hilti Firestop Intumescent Sealant UL-AU" can be installed only in the types of separating elements as specified in the following table:

APPENDIX - UL-AU CERTIFICATE

Separating element	Construction
A.1.1 Flexible walls (single layer plasterboard) t_E ≥ 90 mm and rigid wall	Wall types shall be tested or assessed to AS 1530.4 and AS 4072.1 and achieve minimum -/60/60 or 60/60/60 FRL. 1. Steel studs or timber studs lined on both faces with minimum 1 layer of FR board* (minimum thickness 13 mm) and achieve FRL 60/60/60 or -/60/60. Minimum thickness 90 mm, wall cavity insulation between linings is optional; including double stud wall 2. For timber stud walls there must be a minimum distance of 100 mm of the penetration seal to any timber stud. The cavity between the penetration seal and stud has to be closed with minimum of 100 mm of insulation. 3. Alphapanel wall systems with a minimum overall thickness of 88 mm and consisting of minimum 35 mm thick AlphaPanel with minimum 1 x 13 mm fire rated plasterboard that has been tested or assessed to achieve an FRL of -/60/60 as per FAS210067 R1.2 are also applicable. 4. Rigid wall shall be Aerated concrete, concrete, hollow and solid masonry, with minimum density 550 kg/m^3, minimum 90 mm thick
A.1.2 Flexible walls (single layer plasterboard) t_E ≥ 96 mm and rigid wall	Wall types shall be tested or assessed to AS 1530.4 and AS 4072.1 and achieve minimum -/90/90 or 90/90/90 FRL. 1. Steel studs or timber studs lined on both faces with minimum 1 layers of FR board* (minimum thickness 16 mm) and achieve 90/90/90 or -/90/90, Wall cavity insulation between linings is optional. Minimum thickness 96mm; including double stud wall 2. For timber stud walls there must be a minimum distance of 100 mm of the penetration seal to any timber stud. The cavity between the penetration seal and stud has to be closed with minimum of 100 mm of insulation. 3. Alphapanel wall systems with a minimum overall thickness of 96 mm and consisting of minimum 35 mm thick AlphaPanel with minimum 1 x 16 mm fire rated plasterboard that has been tested or assessed to achieve an FRL of -/90/90 as per FAS210067 R1.2 are also applicable. 4. Rigid wall shall be Aerated concrete, concrete, hollow and solid masonry, with minimum density 550 kg/m^3, minimum 96 mm thick
A.1.3 Flexible walls (double layer plasterboard) t_E ≥ 100 mm and rigid wall	Wall types shall be tested or assessed to AS 1530.4 and AS 4072.1 and achieve minimum -/120/120 or 120/120/120 FRL. 1. Steel studs lined on both faces with minimum 2 layers of FR boards* (minimum thickness 13 mm) and achieve 120/120/120 or -/120/120, Wall cavity insulation between linings is optional. Minimum thickness 100mm; including double stud wall 2. Alphapanel wall systems with a minimum overall thickness of 120 mm and consisting of minimum 35 mm thick AlphaPanel with minimum 2 x 13 mm fire rated plasterboard that has been tested or assessed to achieve an FRL of -/120/120 as per FAS210067 R1.2 are also applicable. 3. Rigid wall shall be Aerated concrete, concrete, hollow and solid masonry, with minimum density 550 kg/m^3, minimum 100 mm thick

APPENDIX - UL-AU CERTIFICATE

Separating element	Construction
A.1.4 Flexible walls (double layer plasterboard) t_E ≥ 110 mm and rigid wall	Wall types shall be tested or assessed to AS 1530.4 and AS 4072.1 and achieve minimum -/120/120 or 120/120/120 FRL. 1. Steel studs or timber studs lined on both faces with minimum 2 layers of FR boards* (minimum thickness 13 mm) and achieve 120/120/120 or -/120/120, Wall cavity insulation between linings is optional. Minimum thickness 110mm; double stud wall also included. 2. Rigid wall shall be Aerated concrete, concrete, hollow and solid masonry, with minimum density 550 kg/m^3, minimum 110 mm thick
A.1.5 Proprietary walls and Rigid walls t_E ≥ 75 mm	Aerated concrete, concrete, hollow and solid masonry, Minimum density 550 kg/m^3, Minimum thickness 75 mm. The wall must have separately been either tested or assessed to AS 1530.4 and AS 4072.1 to achieve required FRL. Proprietary wall systems such as Speedpanel, Korok, Walsc, Hebel, Dincel, AFS logic wall included, detailed description as below: 1. Speedpanel wall, minimum 78 mm thickness, achieving FRL -/120/120 2. Walsc, minimum 75 mm thick with min. 525 kg/m^3 dry density, with tongue and groove joints at the edges, achieving FRL -/120/120 3. Hebel wall, minimum 75 mm with minimum 510 kg/m^3 dry density, achieving FRL -/120/120 4. Dincel wall, minimum 155 mm thick with polymer skins, filled with normal-weight concrete
A.1.6 Rigid walls and Proprietary walls t_E ≥ 150 mm	The wall must have separately been either tested or assessed to AS 1530.4 and AS 4072.1 to achieve minimum -/120/120 or 120/120/120 FRL by a NATA Accredited Testing Lab Aerated concrete, concrete, hollow and solid masonry, Minimum density 550 kg/m^3, Minimum thickness 150 mm 1. Dincel wall, minimum 155 mm thick with polymer skins, filled with normal-weight concrete
A.1.7 Rigid floors t_E ≥ 150 mm	The Floor must have separately been either tested or assessed to AS 1530.4 and AS 4072.1 to achieve minimum -/120/120 or 120/120/120 FRL by a NATA Accredited Testing Lab Aerated concrete, concrete, minimum thickness 120 mm and minimum density 650 kg/m^3 1. The bare Rigid Floor must have a minimum thickness of 120mm, in this case, aperture faming must be provided to locally build up the floor thickness to 150 mm. 2. The bare Rigid Floor have a minimum thickness of 150 mm, in this case, no further build up is needed.
* Fire rated board can optionally be USG Boral, CSR, Siniat, GIB, BGC, Elephant, Midland or other equivalent plasterboards supplied by other manufacturers, which the wall configuration is tested or assessed to AS 1530.4 and AS 4072.1 and achieve required FRL	

APPENDIX - UL-AU CERTIFICATE

The first support of the cable tray (for cables / conduits) shall be located at maximum 250 mm away from both faces of wall constructions and maximum 250 mm from the upper face of floor constructions. Otherwise, stop and start cable tray or support system minimum 100 mm off the separating material from both sides Other parts or service support constructions shall not penetrate the penetration seal.
Services through 78 mm Speedpanel can achieve the specified FRL given that • 78 mm Speedpanel has at least one layer of 13 mm or 16 mm fire rated plasterboard build up each side. • The edge of plasterboard build up is minimum 100 mm to the service core hole in all directions. • All grooves between the Speedpanel and fire rated plasterboard is filled with Hilti Firestop Acrylic sealant CP606, min. 30 mm depth.

APPENDIX - UL-AU CERTIFICATE

APPENDIX B - DESCRIPTION OF THE PRODUCT

B.1 Hilti Firestop Intumescent Sealant CP 611A

"Hilti Firestop Intumescent Sealant CP 611A" is a 1-component product and is composed essentially of filling substances, intumescent components and binder (acrylic).

"Hilti Firestop Intumescent Sealant CP 611A" **is equivalent to "**Hilti Firestop Intumescent Sealant CFS-IS"

B.2 Mineral Wool

Loose mineral wool products suitable for being used as backfilling material

For use as backing

Loose mineral wool products suitable for being used as backfilling material shall be minimum 50 kg/m^3 density, minimum service temperature 300 °C degree Celsius, loose mineral wool shall be cut in size to fit into the annular gap between service and base material

Mineral wool products suitable for being used as pipe insulation material propose as below

Mineral wool products suitable for being used as pipe insulation material shall be minimum 90 kg/m^3 density with minimum 20 mm thickness, minimum 1000 degree Celsius melting point, in the format of either pre-formed pipe section or mineral wool blanket

B.3 Foamed elastomeric insulation products for pipe insulation

Foamed elastomeric insulation compliant to fire hazard requirements of NCC, Class 1 of AS 1530.3. including but not limited to

Product	Manufacturer	Specification
Armaflex AF	Armacell International GmbH	Product data sheet of manufacturer

B.4 PE backing rod as backing material

PE backing rod can optionally be open or closed cell PE, friction fit between service and base material

B.4 Technical product literature

Technical data sheet and instructions for use "Hilti Firestop Intumescent Sealant CP 611A", see Annex F of the UL-AU.

APPENDIX - UL-AU CERTIFICATE

APPENDIX C – RESISTANCE TO FIRE CLASSIFICATION OF PENETRATION SEALS MADE OF "HILTI FIRESTOP INTUMESCENT SEALANT CP 611A"

C.1 General Information

Table of Contents

APPENDIX - UL-AU CERTIFICATE

APPENDIX - UL-AU CERTIFICATE

C.1.2 Local Aperture framing configuration

Aperture framing is required when the base material does not achieve the specified minimum thickness in Appendix A, base material must be included in the report and achieve required FRL according to AS 1530.4

Plasterboard build up type local aperture framing can be provided given:

- Minimum 100 mm wide around opening (when plasterboard build up width is limited by fire rated wall or floor, minimum 20 mm wide of plasterboard is required, max two sides)
- Plasterboard build up must be fixed by suitable fixing in Table in C.1.3
- Plasterboard build up can be post installed, gap between joining plasterboard is limited to 5 mm and to be sealed with CP 606

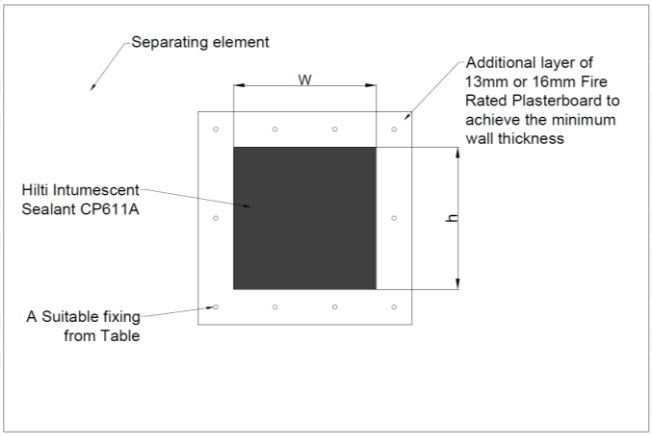

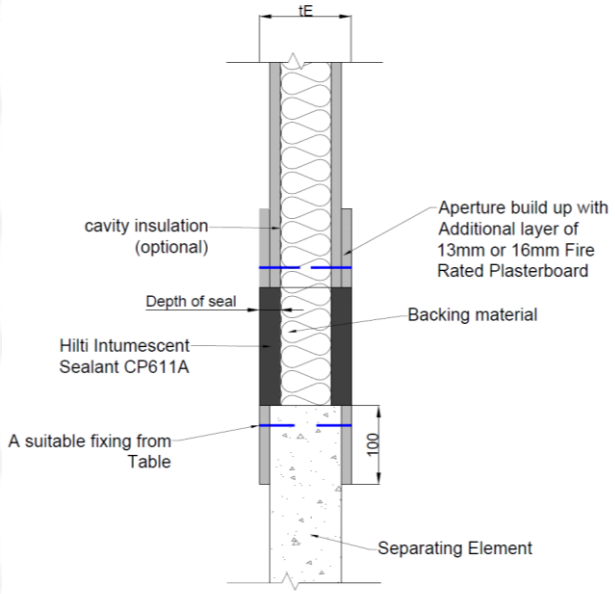

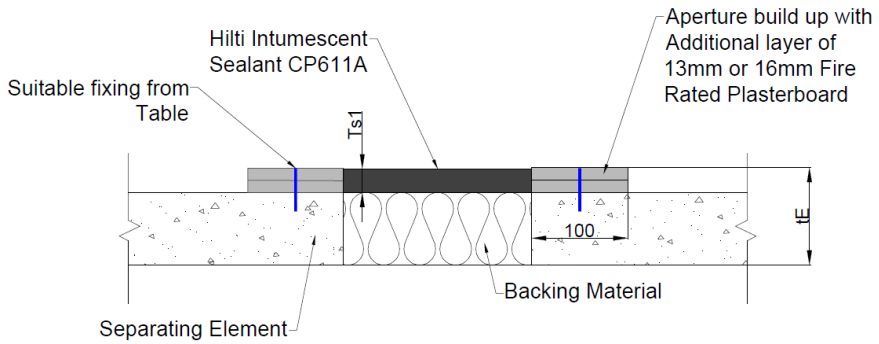

APPENDIX - UL-AU CERTIFICATE

C.1.3 Fixing for base material

Anchoring System		Minimum Size	Flexible Wall (Plasterboard lined)	Aerated Concrete Wall (Hebel)	Solid Concrete Walls & Floors
Hilti Screw Anchor	HUS3-P	M6		✓*	✓
	HUS3-H			✓*	✓
	HUS			✓*	✓
Hilti Expansion Anchor	HSA				✓
	HST				✓
	DBZ 6/45				✓
Hilti Cavity Anchor	HTB-S		✓		
	HHD-S		✓		
Others	#14/10x65mm Hex Head Type 17 Screw	14g		✓	
	Laminating / Drywall / Plasterboard Screws, with steel washers of at least 19mm in diameter, length as required.	10g	✓		
	Threaded Rod with Nuts & Washer	M6	✓	✓	✓

* Minimum length/embedment depth of fixing required for ACC Hebel walls is 60mm

APPENDIX - UL-AU CERTIFICATE

C.1.4 P.E. backing rod installation configuration

Sealant backed with Backing Rod

In situations where backing material is optional or cavity insulation is not used, a Closed-Cell or Open-Cell polyethylene foam backing rod may optionally be used to control the depth of Hilti Firestop Intumescent CP611a within or between flexible or rigid walls.

Size of Polyethylene Backing Rod

Max. gap width around Pipes (S1) (mm)	Size of PE rod (mm)
8	10
12	15
16	20
20	25
30	40

C.1.5 Rough in configuration

S configuration

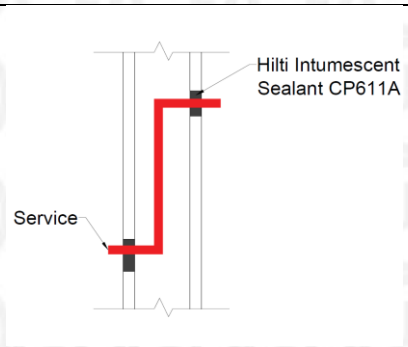

C configuration

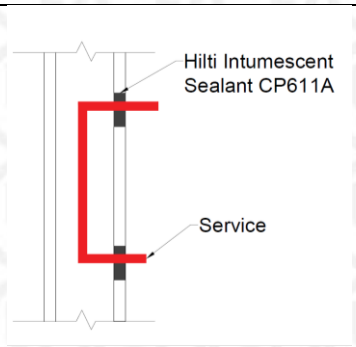

L configuration

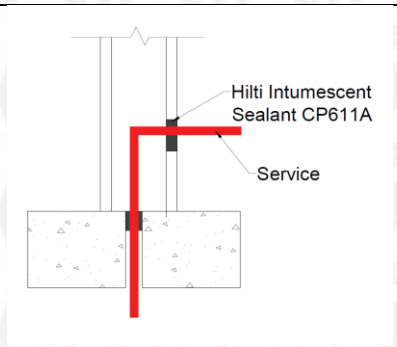

Service, single or bundled services achieve the specified FRL as rough in configurations, in S, C, L configurations.

S configuration: service enters from one side of the wall, travel in between the plasterboard sheets and exit at the other side of the wall

C configuration: service enters from one side of the wall, travel in between the plasterboard sheets and exit at the same side of the wall

L configuration: service penetrating from floor, travel in between the plasterboard sheets and exit at either side of the wall

Vertical separation between entry and exit shall be minimum 100 mm

Services not perpendicular to the fire separation

Applying 10.12.5.2 of AS 1530.4, Penetrations not perpendicular to the plane of the element are acceptable, provided the fire-stopping system has similar exposure and dimensions

APPENDIX - UL-AU CERTIFICATE

C.2 Flexible or rigid walls, tE ≥ 90 mm, wall type A.1.1, A.1.2

For detailed specifications of products covered, refers to section A.1

For detailed specifications of separating base material covered, refers to section A.1.1 - A.1.7

For detailed specifications of additional protections for metal pipe/insulated metal pipe to achieve better insulation rating, refers to B.2, B.3

For detailed specifications of backing material, refers to section B.1, B.4

For detailed specifications of backing rod size selection, refers to section C.1.5

For detailed specifications of fixings required into separating base material, refers to section C.1.3

For detailed specifications of rough in configurations, refers to section C.1.5

For detailed specifications of Aperture framing to locally build up the separating base material to required thickness, refers to section B.1.2

Opening size
Maximum seal size is 150 x 150 mm or openings of any shape of equivalent area, subject to the application

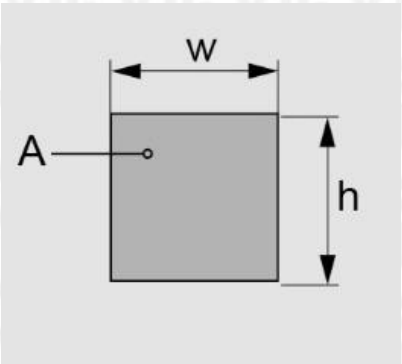

Annular gap between service and opening
Details on annular gap between service and base material specified in the solution table, as Xmin and Xmax, also defines the min and max opening size for the opening if opening size is not specified.

When annular gap is not specified in the solution table,

Mixed services
Mixed services within the same opening are not allowed for approved applications in this section C.2

APPENDIX - UL-AU CERTIFICATE

C.2.1 Electrical services

C.2.1.1 Single and bundled cable, conduit

Service configuration

Service, single cable, cable bundle and single conduit achieve the specified FRL as through penetration below applies to rough in configurations, including S, C, L configurations as per C.1.5

CP 611A sealant installation configurations – Seal types

Seal type 2.3 Seal depth: full depth of plasterboard and finish flush	**Seal type 2.4** Seal depth: full depth of plasterboard Coning: 25 x 25 mm
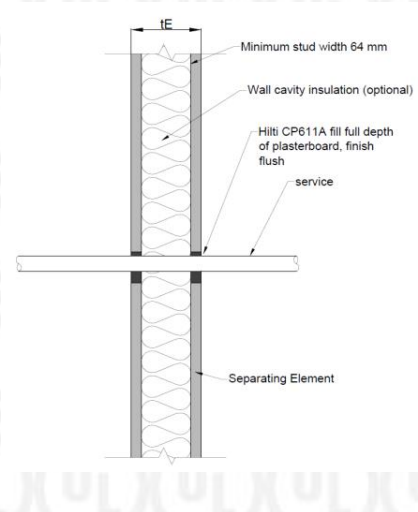	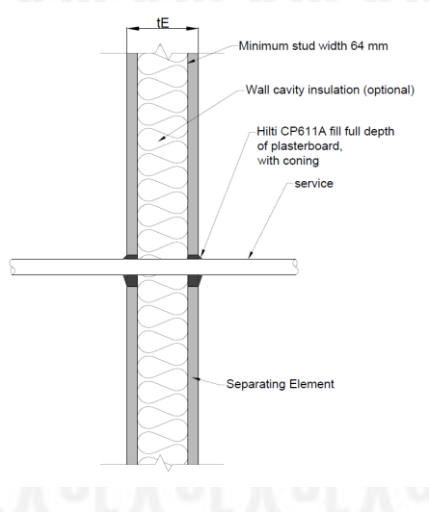
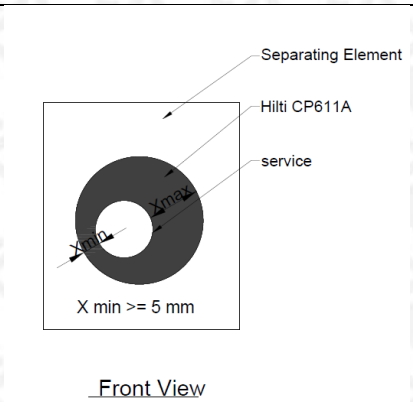	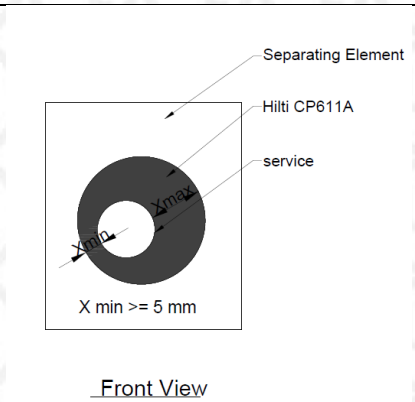

APPENDIX - UL-AU CERTIFICATE

Certificate No. UL-AU-230008
Page 16/97
Date of Issue 2024-10-02

Cable Service	Maximum Number of Cables in Cable Bundle	Diameter of Opening (mm)	Thickness/ Depth of Sealant mm	X min (mm)	X max (mm)	penetration seal	FRL in wall type A.1.1	FRL in wall type A.1.2
Up to 16mm²,2C+E Circular Sub-mains Cables (Single Cable)	1	40	Full depth of plasterboard/ lining thickness	5	18	Seal type 2.3	-/60/60	-
Up to 16mm² 2C+E TPS Cable	1	40		5	18	Seal type 2.3	-/60/60	-
Up to 2.5mm²,2C+E TPS Cable	4	40		5	18	Seal type 2.4, with coning	-/60/60	-/90/90
Up to 2.5mm² Fire rated cable	3	40		5	15	Seal type 2.3	-/60/60	-
Fire rated cable (multi pair, submain) up to 18 mm dia.	1	40		5	18	Seal type 2.3	-/60/60	-/90/90
Cat5 & Cat6 series data Cable	7	40		5	15	Seal type 2.4, with coning	-/60/60	-
CAT series cable & RG6 cable	6	40		5	15	Seal type 2.3	-/60/60	-
Chorus Optical 12F×12 cable	3	40		5	15	Seal type 2.3	-/60/60	-
Up to 1/2" coaxial cable	1	25		5	15	Seal type 2.3	-/60/60	-
RG6 Quad Shield Coax Cable	4	40		5	18	Seal type 2.3	-/60/60	-
20mm rigid or corrugated uPVC Conduit Filled with cables	2	40		5	15	Seal type 2.3	-/60/60	-
Up to 25mm rigid or corrugated uPVC Conduit Filled with cables	4	40		5	10	Seal type 2.3	-/60/60	-

* Construction details - through penetration & rough in

APPENDIX - UL-AU CERTIFICATE

Certificate No. UL-AU-230008
Page 17/97
Date of Issue 2024-10-02

C.2.1.2 D1 & D2 standard cable configuration, with or without cable tray

CP 611A sealant installation configurations – Seal types

Seal type 2.5

Backing: CFS CT B 1S or mineral wool backing as per B.2
Seal depth: full depth of plasterboard and finish flush

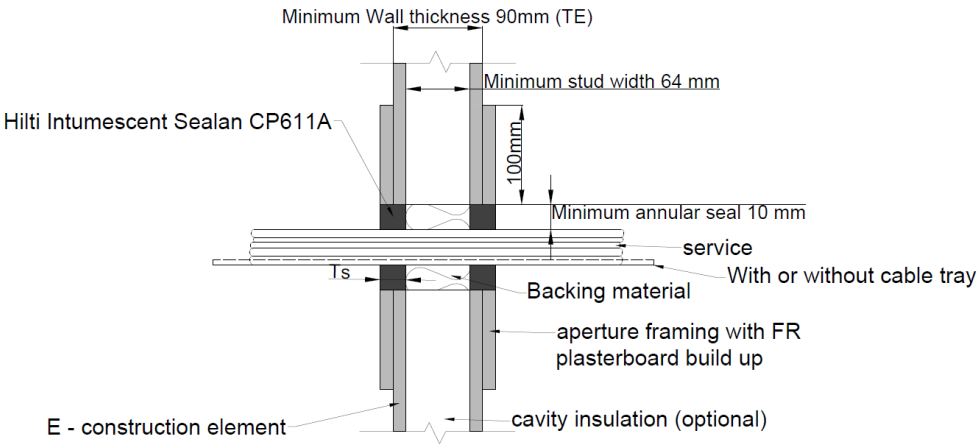

AS 1530.4:2014 D1 Standard Cable Sets, Front View

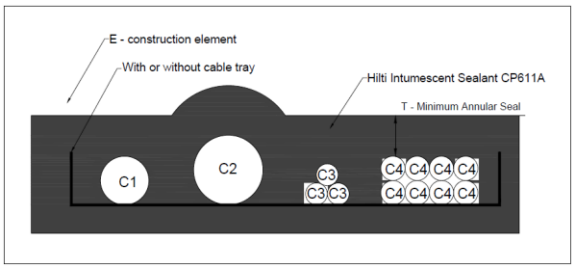

AS 1530.4:2014 D2, Standard Cable Sets, Front View

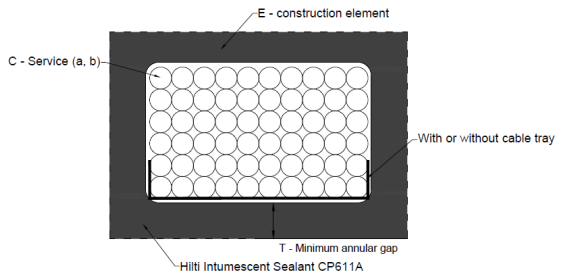

AS 1530.4:2014 Standard Cable Sets, Side View

AS 1530.4:2014 D1 Cable Set

C_1	1×Single Core PVC insulated, PVC sheathed for 0.6/1kV copper conductors complying with AS5000.1,1×630mm² (127×2.52mm conductors, insulation 2.4mm thick, OD41.4mm)
C_2	1×three-core plus earth PVC insulated, PVC sheathed for 0.6/1kV copper conductors complying with AS5000.1, 1×185mm² (32×2.52mm conductors, insulation 2.4mm thick OD53.8mm)
C_3	3 x thee-core plus earth PVC insulated, PVC sheathed for 0.6/1kV copper conductors complying with AS5000.1, 3 x 6mm ^{2} (7 x 1.04mm conductors, OD 16 mm)
C_4	8 x thee-core plus earth PVC insulated, PVC sheathed for 0.6/1kV copper conductors complying with AS5000.1, 8 x 16mm ^{2} (7 x 1.04mm conductors, OD 20.4 mm)

APPENDIX - UL-AU CERTIFICATE

Certificate No. UL-AU-230008
Page 18/97
Date of Issue 2024-10-02

AS 1530.4 D2 Cable Set:

a)	Pack of 60 (10×6) 50 pair telecommunication cables
b)	100 Wires, each wire,0.5mm OD

Service	Wall build up	Thickness/ Depth of Sealant mm	Minimum Annular Gap	Backing Material	Seal Type	FRL
PVC Insulated Power Cables with or without Cable Tray. (Standard D1 Cable Set, in accordance with AS 1530.4:2014 Appendix D)	One layer each side local aperture framing as per C.1.2	25	10	CFS CT B 1S or mineral wool backing 100 kg/m^3	Seal type 2.5	-/60/60
PVC Insulated Power Cables with or without Cable Tray. (Standard D2 Cable Set, in accordance with AS 1530.4:2014 Appendix D)						

Results in Table may also be applied to rigid walls comprised of concrete, aerated concrete, autoclaved aerated concrete, Hebel, Korok, or hollow masonry walls with a minimum thickness of 75mm. Multiple layers of AP2 must be applied to one side or both sides of the wall to achieve the minimum overall wall thickness of 116mm.

Other parts or service support constructions shall not penetrate the penetration seal.
Stop and start cable tray or support system minimum 100 mm off the surface of separating material from both sides

APPENDIX - UL-AU CERTIFICATE

Certificate No. UL-AU-230008
Page 19/97
Date of Issue 2024-10-02

C.2.2 Plumbing and sprinkler services

C.2.2.1 PEX, PE, PP pipe

Service configuration
Service, single or bundled services achieve the specified FRL as through penetration as well as rough in configurations, including S, C, L configurations as per C.1.5

CP 611A sealant installation configurations – Seal types

Seal type 2.6 Seal depth: full depth of plasterboard and finish flush	**Seal type 2.7** Seal depth: full depth of plasterboard Coning: 25 x 25 mm	**Seal type 2.8** Additional proudct: CFS-C P 50/1.5” Seal depth: full depth of plasterboard and retrofit collar
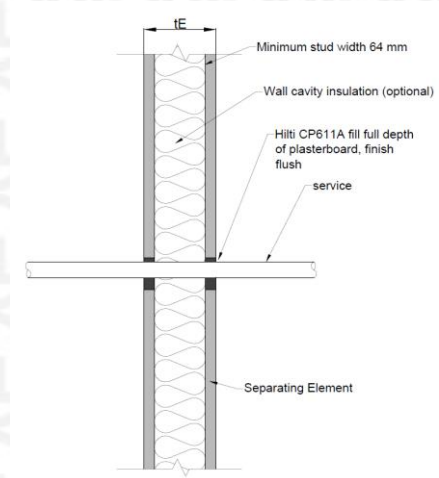	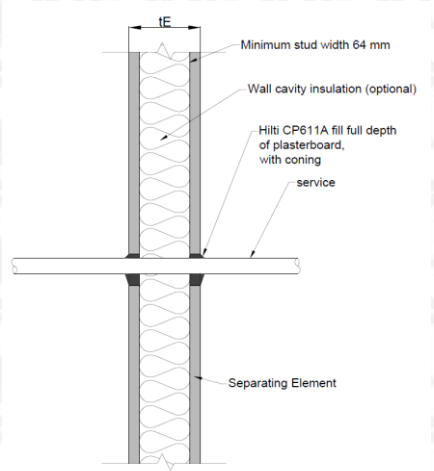	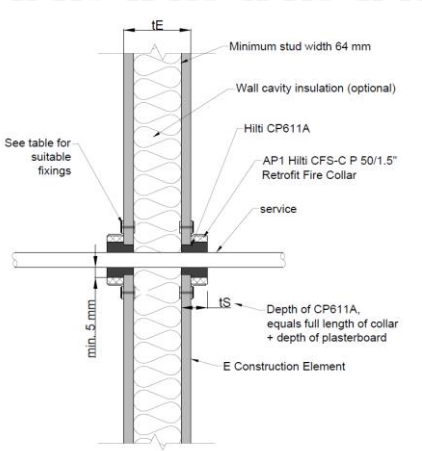
Front view	Front view	Front view
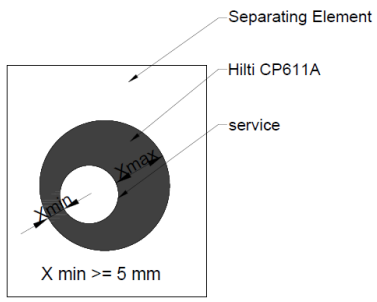 Front View	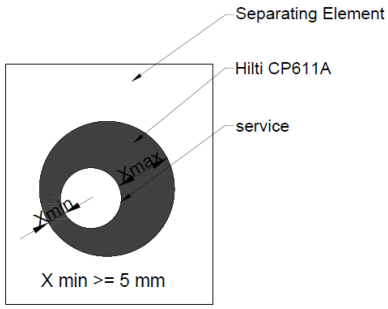 Front View	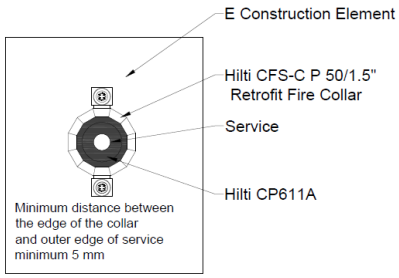

APPENDIX - UL-AU CERTIFICATE

Certificate No. UL-AU-230008
Page 20/97
Date of Issue 2024-10-02

Pipe Service	Pipe Diameter (mm)	Pipe Wall Thickness Range (mm)	Hole Diameter Range (mm)*	x min	Penetration seal	FRL in wall type A.1.1	FRL in wall type A.1.2
PE-Xa according to AS 2492:2007	16	1.2 – 2.4	26 - 38	5	Seal type 2.6 & Seal type 2.8	-/60/60	-
	20	2.3 – 3.4	30 - 40				
	25	2.8 – 3.9	35 - 48				
PE-Xb according to AS 2492:2007	16	1.2 – 2.4	26 - 38	5	Seal type 2.6 & Seal type 2.8	-/60/60	-
	20	2.3 – 3.4	30 - 40				
	25	2.8 – 3.9	35 - 48				
PE-Xc *according to AS 2492:2007	16	2.2	30 - 40	5	Seal type 2.6 & Seal type 2.7	-/60/60	-/90/90
	20	3.3	30 - 40				
PE-Xa/Al/PE	16	2.0 – 2.6	26 - 38	5	Seal type 2.6 & Seal type 2.8	-/60/60	-
	20	2.3 – 2.9	30 - 40				
	25	3.5 - 3.7	35 - 48				
PE-Xb/AL/PE-Xb	16	2.0 – 2.6	26 - 38	5	Seal type 2.6 & Seal type 2.8	-/60/60	-
	20	2.3 – 2.9	30 - 40				
	25	3.5 – 3.7	35 - 48				
PP-R & PP-R SDR 11	20	2.8	30 - 40	5	Seal type 2.6 & Seal type 2.8	-/60/60	-
	25	3.5	35 - 48				
	32	2.9, 3.6	48 - 54				
PE-RT/AL/PE-RT (KELIT KELOX KM 110 and Viega) according to AS 4176.2/ ISO 21003-2	16	2	26 - 38	5	Seal type 2.6 & Seal type 2.8	-/60/60	-
	20	2.25	30 - 40				
	25	2.5	35 - 48		Seal type 2.7 & Seal type 2.8		
	32	3	48 - 54				

APPENDIX - UL-AU CERTIFICATE

C.2.2.2 outlet configuration

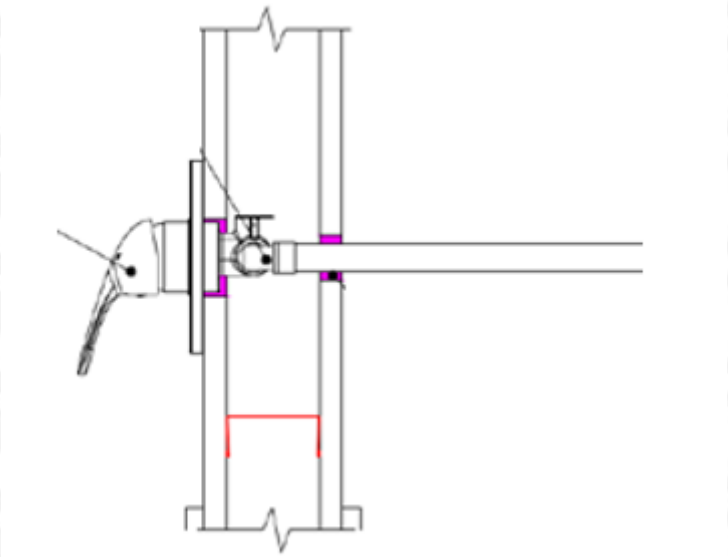

Pipe type	Elbow	Aperture size (mm)	Local fire-stopping protection	Configuration	FRL in wall type A.1.1
Up to 20 mm PEX-B pipe x 2 (two pipes – hot and cold water)	• 2 × 20 mm × 15 male elbows • 1 × Shower mixer	• 2 x 32 on PEX pipe side • 54 mm on the shower mixer side	The gap between the service and the separating element filled with sealant CP 611a to the full depth of the plasterboard, finishing flush – on both sides.	Straight, S, C and L	-/60/60 (two-way)

APPENDIX - UL-AU CERTIFICATE

C.2.2.3 brass elbow lug configuration

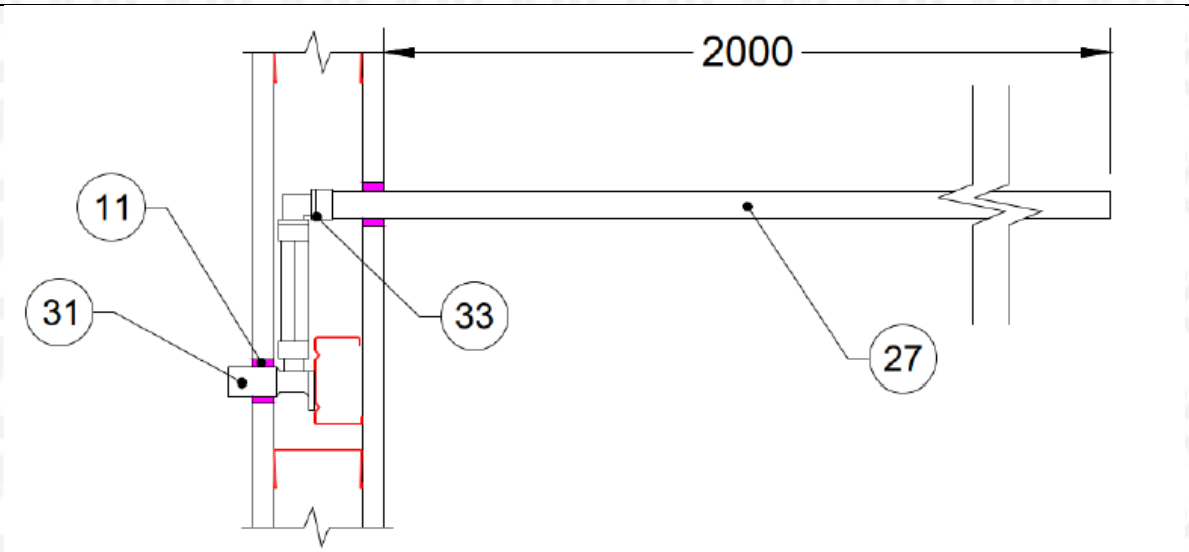

Pipe type	Elbow	Aperture size (mm)	Local fire-stopping protection	Configuration	FRL in wall type A.1.1	FRL in wall type A.1.2
Up to 20 mm PEX-A or, PEX-B pipe x 2 (two pipes – hot and cold water)	1 × extended brass lugged elbow 20 mm × ½" × 65 mm. 1 × 90° brass elbow	32 – 40	The gap between the service and the separating element filled with sealant CP 611a to the full depth of the plasterboard, finishing flush – on both sides.	Straight, S, C and L	-/60/60 (two-way)	-
			The gap between the service and the separating element filled with sealant CP 611a to the full depth of the plasterboard, finishing with a 30 mm fillet on each side of the wall.		-	-/90/90 (two-way)

APPENDIX - UL-AU CERTIFICATE

C.2.3 HVAC services

Service description

The section covers FR pair coil and insulated metal pipe, where pipe can be either copper or metal pipe as per specification and insulation shall be **Foamed elastomeric insulation as per B.3**

Service configuration

Service, single or bundled services achieve the specified FRL as through penetration as well as rough in configurations, including S, C, L configurations as per C.1.5

Service variation allowed

Single insulated copper pipe also covered when pipe size provided copper pipe size 6.35-19.05, insulation 13 – 19, install as per respective configuration, with cable and/or condensation pipe

Max two single insulated copper pipe can be put together provided copper pipe size 6.35-19.05, insulation 13 – 19 mm install as per respective configuration, without cable and/or condensation pipe

CP 611A sealant installation configurations – Seal types

Seal type 2.9	Seal type 2.10	Seal type 2.11
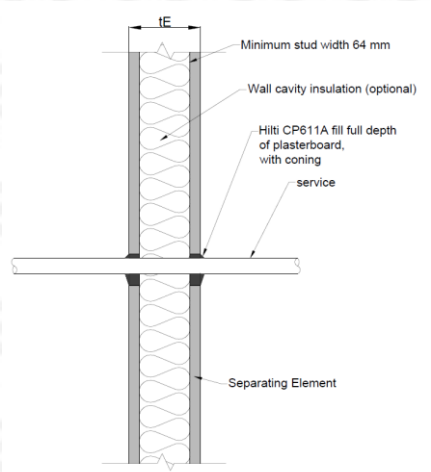	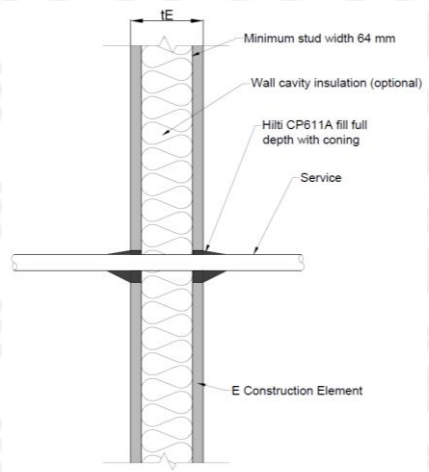	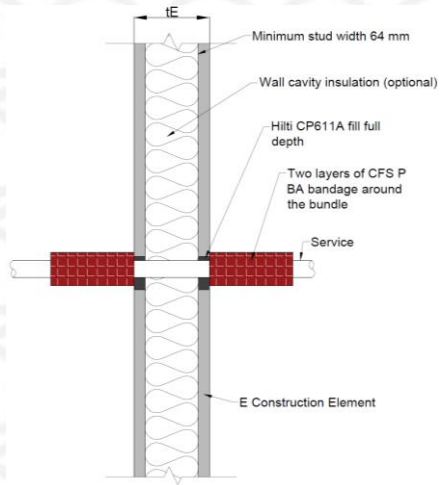
• Seal depth: CP 611a full depth of plasterboard and finished with a coning 5 x 5 mm on both sides	• Seal depth: CP 611a full depth of plasterboard and finished with a coning 30 x 30 mm on both sides	• Seal depth: full depth of plasterboard • Additional wrapping: 2 layers of CFS-P BA putty bandage

APPENDIX - UL-AU CERTIFICATE

Certificate No. UL-AU-230008
Page 24/97
Date of Issue 2024-10-02

Seal type 2.9 Front view	**Seal type 2.10** Front view	**Seal type 2.11** Front view
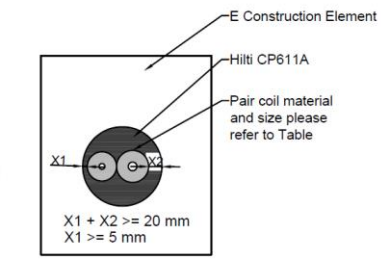 Front View - one core	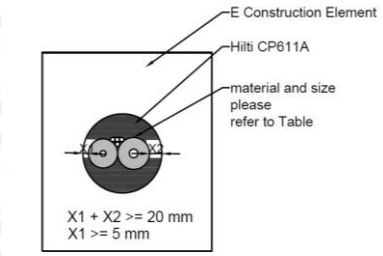 Front View - one core	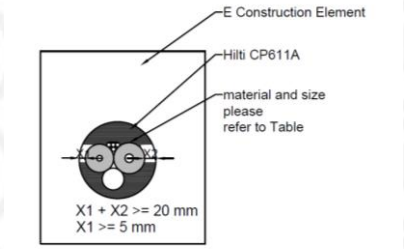 Front View - one core
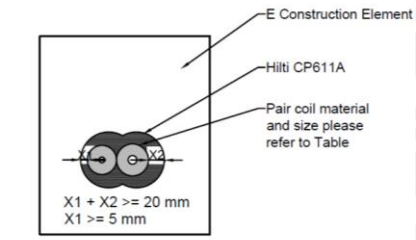 Front View - stitch core	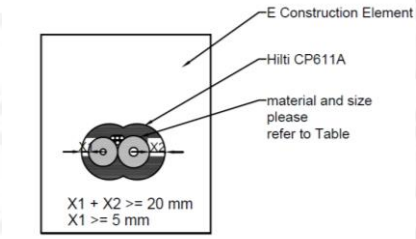 Front View - stitch core	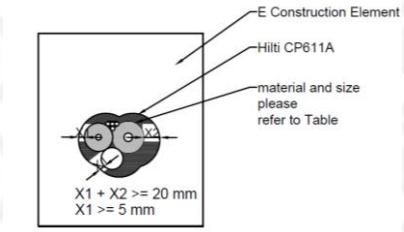 Front View - stitch core
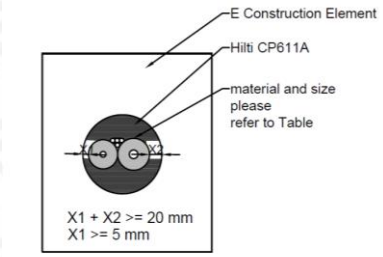 Front View - one core	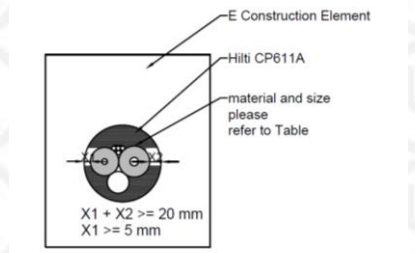 Front View - one core	
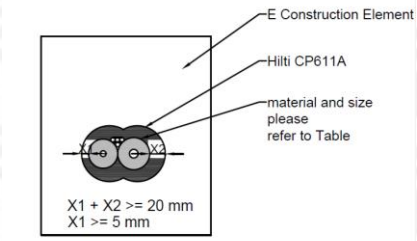 Front View - stitch core	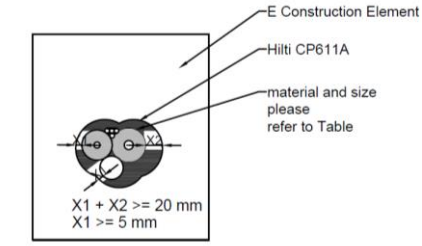 Front View - stitch core	

Certification Body **UL International New Zealand Limited**
54 Tarndale Grove, Albany,
Auckland 0632, New Zealand.
+64 9 415 3355, customerservice.anz@ul.com,
https://au-nz.ul.com

APPENDIX - UL-AU CERTIFICATE

C.2.3.1 HVAC – pair coil configuration

Pair coil tube size		Insulation thickness (mm)	Minimum aperture size (mm)	Maximum aperture size (mm)	Seal type	FRL in wall type A.1.1	FRL in wall type A.1.2
mm	Inch						
6.35-9.52	1/4-3/8	13 or 19	Penetrant outer diameter + minimum 20 mm, stitch core allowed	125 mm diameter or equivalent area	Seal type 2.9	-/60/60	-/90/90
6.35-12.7	1/4-1/2	13 or 19			Seal type 2.9	-/60/60	-/90/90
6.35-15.88	1/4-5/8	13 or 19			Seal type 2.9	-/60/60	-/90/90
9.5-15.99	3/8-5/8	13 or 19			Seal type 2.9	-/60/60	-/90/90
9.5-19.05	3/8-3/4	13 or 19			Seal type 2.9	-/60/60	-/90/90

C.2.3.2 HVAC – pair coil with cable configuration

Pair coil tube size		Insulation thickness (mm)	Cable type	Min aperture size (mm)	Maxi aperture size (mm)	FRL in wall type A.1.1	FRL in wall type A.1.2
mm	Inch						
6.35-9.52	1/4-3/8	13 or 19	• 1 × power cable up to 2.5 mm² • 1 x CAT data cable up to 1.0 mm²	Penetrant outer diameter + minimum 20 mm, stitch core allowed	125 mm diameter or equivalent area	-/60/60 (Seal type 2.9)	-/90/90 (Seal type 2.10)
6.35-12.7	1/4-1/2	13 or 19				-/60/60 (Seal type 2.9)	-/90/90 (Seal type 2.10)
6.35-15.88	1/4-5/8	13 or 19				-/60/60 (Seal type 2.9)	-/90/90 (Seal type 2.10)
9.5-15.99	3/8-5/8	13 or 19				-/60/60 (Seal type 2.9)	-/90/90 (Seal type 2.10)
9.5-19.05	3/8-3/4	13 or 19				-/60/60 (Seal type 2.9)	-/90/90 (Seal type 2.10)

APPENDIX - UL-AU CERTIFICATE

C.2.3.3 HVAC – pair coil with pipe and cable configuration

Pair coil tube size		Insulation thickness (mm)	Cable type	Condensation pipe type	Min. aperture size (mm)	Max. aperture size (mm)	FRL in wall type A.1.1	FRL in wall type A.1.2
mm	Inch							
6.35-9.52	1/4-3/8	13 or 19	• 1 × power cable up to 2.5 mm² • 1 x CAT data cable up to 1.0 mm²	1 × up to 25 mm uPVC condensation pipe rigid or flexible	Penetrant outer diameter + minimum 20 mm, stitch core allowed	125 mm diameter or equivalent area	-/60/60 (Seal type 2.10)	-/90/90 (Seal type 2.11)
6.35-12.7	1/4-1/2	13 or 19					-/60/60 (Seal type 2.10)	-/90/90 (Seal type 2.11)
6.35-15.88	1/4-5/8	13 or 19					-/60/60 (Seal type 2.10)	-/90/90 (Seal type 2.11)
9.5-15.99	3/8-5/8	13 or 19					-/60/60 (Seal type 2.10)	-/90/90 (Seal type 2.11)
9.5-19.05	3/8-3/4	13 or 19					-/60/60 (Seal type 2.10)	-/90/90 (Seal type 2.11)

C.2.3.4 HVAC – condensation pipe configuration

Condensation pipe type	Pipe outer diameter (mm)	aperture size (mm)	Local fire-stopping protection	Seal type	FRL in wall type A.1.1	FRL in wall type A.1.2
1 × up to 25 mm uPVC rigid condensation pipe	up to 33 mm	48 - 54	CP 611a filled to the full depth of the plasterboard and finished with a 5 mm sealant fillet cone – on both sides.	Seal type 2.9	-/60/60	-/90/90
1 × up to 25 mm uPVC corrugated conduit	up to 25 mm	38 - 46		Seal type 2.9	-/60/60	-/90/90

APPENDIX - UL-AU CERTIFICATE

C.2.3.5 HVAC – condensation pipe with cable configuration						
Cable type	Condensation pipe type	Min. aperture size (mm)	Max. aperture size (mm)	Local fire-stopping protection	FRL in wall type A.1.1	FRL in wall type A.1.2
• 1 × power cable up to 2.5 mm² • 1 x CAT data cable up to 1.0 mm²	1 × up to 25 mm uPVC condensation pipe rigid or flexible	Penetrant outer diameter + minimum 20 mm, stitch core allowed	125 mm diameter or equivalent area	CP 611a filled to the full depth of the plasterboard and finished with a 30 mm sealant fillet cone – on both sides.	-/60/60 (Seal type 2.10)	-/90/90 (Seal type 2.10)

APPENDIX - UL-AU CERTIFICATE

C.3 Flexible or rigid walls, tE ≥ 100 mm, wall type A.1.3

For detailed specifications of products covered, refers to section A.1

For detailed specifications of separating base material covered, refers to section A.1.1 - A.1.7

For detailed specifications of additional protections for metal pipe/insulated metal pipe to achieve better insulation rating, refers to B.2, B.3

For detailed specifications of backing material, refers to section B.1, B.4

For detailed specifications of backing rod size selection, refers to section C.1.5

For detailed specifications of fixings required into separating base material, refers to section C.1.3

For detailed specifications of rough in configurations, refers to section C.1.5

For detailed specifications of Aperture framing to locally build up the separating base material to required thickness, refers to section B.1.2

Opening size

Maximum seal size is 150 x 150 mm or openings of any shape of equivalent area, subject to the application

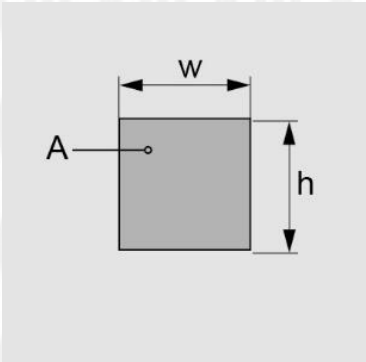

Annular gap between service and opening

Details on annular gap between service and base material specified in the solution table, as Xmin and Xmax, also defines the min and max opening size for the opening if opening size is not specified.

APPENDIX - UL-AU CERTIFICATE

Certificate No. UL-AU-230008
Page 29/97
Date of Issue 2024-10-02

When annular gap is not specified in the solution table,

Minimum distance valid for installation services	**Wall (mm)**	
Cables to edge of seal	s_1 =	0
Cable to other cables / small conduits	s_2 =	0
Tied cable bundle to seal edge	s_1 =	10
Tied cable bundle to other small conduits	s_2 =	0
Conduits Ø ≤ 16 mm to edge of seal	s_1 =	10
Conduits Ø ≤ 16 mm to other conduits Ø ≤ 16 mm	s_2 =	0
Conduits 16 ≤ Ø ≤ 32 mm to edge of seal	s_1 =	10
Conduit bundle to other conduit bundle (conduits from 16 to 32 mm)	s_2 =	10

Mixed services

Mixed services within the same opening applies to approved applications in this section C.3

Mixed services in one opening - clear distance between services

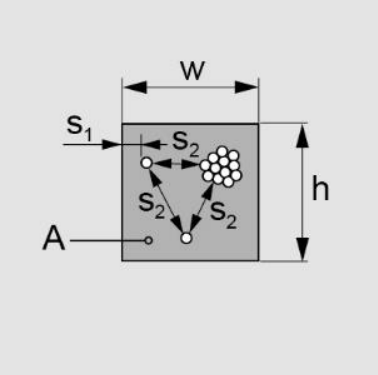

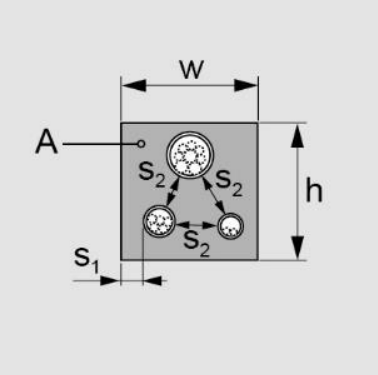

Minimum distance valid for installation services	**Wall (mm)**	
Cable to other cables / small conduits	s_2 =	0
Tied cable bundle to other small conduits	s_2 =	0
Conduits Ø ≤ 16 mm to other conduits Ø ≤ 16 mm	s_2 =	0
Conduit bundle to other conduit bundle (conduits from 16 to 32 mm)	s_2 =	10

APPENDIX - UL-AU CERTIFICATE

Certificate No. UL-AU-230008
Page 30/97
Date of Issue 2024-10-02

C.3.1 Blank seal

CP 611A sealant installation configurations – Seal types

Seal type 3.1
Blank seal without backing

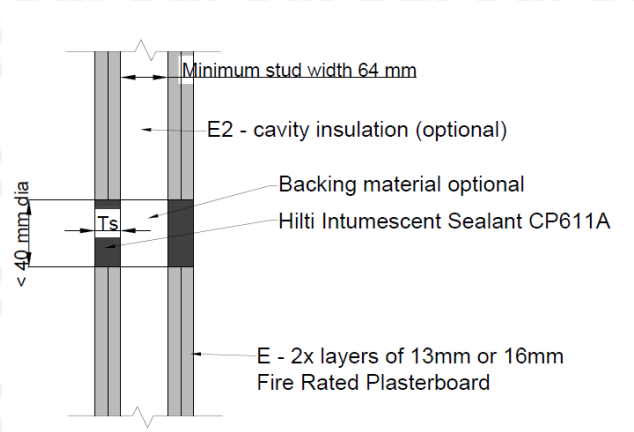

Seal type 3.2
Blank seal with backing

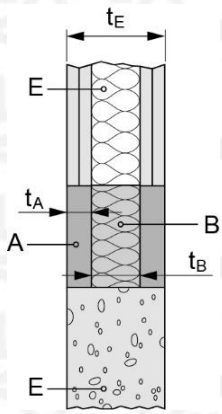

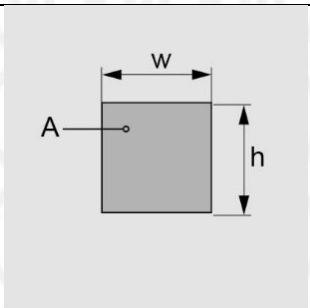

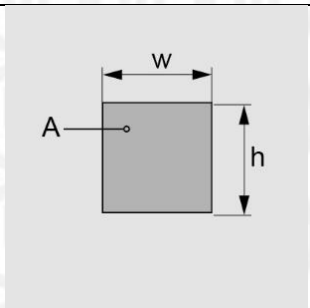

Service (C)	Opening Size (Do): Diameter mm or Square, Length x Width (mm)	Thickness Depth of sealant (Ts) (mm)	Backing Material (B)	Seal Type	FRL
Blank Seal	Up to 40 mm dia. circular openings or equivalent area	Depth of plasterboard lining thickness 2 x 13mm = 26mm 2 x 16mm = 32mm	Optional	Seal Type 3.1	-/120/120
	Up to 150 x 150 mm or circular openings of equivalent area		Backing material must be mineral wool / stone wool with a minimum density of 100kg/m^3	Seal Type 3.2	-/120/120

APPENDIX - UL-AU CERTIFICATE

Certificate No. UL-AU-230008
Page 31/97
Date of Issue 2024-10-02

C.3.2 Electrical services

Service description
Electrical cables include Multicore power (e.g.TPS, Circular Sub-mains), single core Power, made of Copper or Aluminium core with PVC or XLPE as sheathing/insulting material, as per detailed cable specifications in the tables

C.3.2.1 Single and bundled cable, conduit

Service configuration
Service, single or bundled services achieve the specified FRL as through penetration as well as rough in configurations, including S, C, L configurations as per C.1.5

CP 611A sealant installation configurations – Seal types

Seal Type 3.3

Cables:	**Conduits:**
Seal depth: full depth of plasterboard and finish flush with or without backing	Seal depth: full depth of plasterboard and finish flush with or without backing
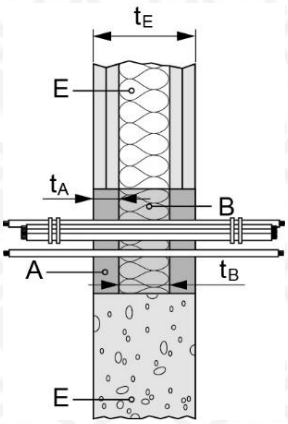	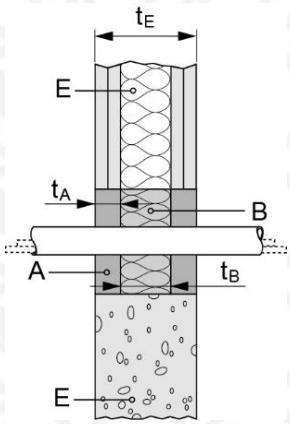
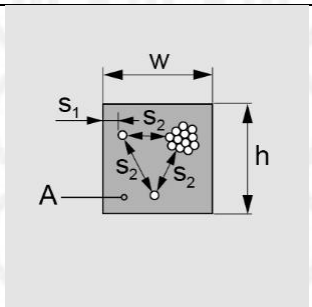	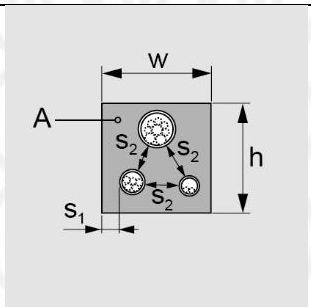

All sheathed cable types currently and commonly used in building practice in Australia (e.g. power (TPS, submain), control, signal, telecommunication, data, optical fibre cables)

APPENDIX - UL-AU CERTIFICATE

Service (C)	Aperture Size (Do): Diameter in mm or equivalent	Thickness/ Depth of Sealant (Ts) mm	Backing Material (B)	Seal Type	FRL
Single cables - max 25 mm dia.	up to 40	Full depth of plasterboard lining thickness 2 x 13mm = 26mm 2 x 16mm = 32mm	Optional	Seal type 3.3	-/120/120
	40 - 150		Required as per B.2, thickness (t_B) ≥ 50 mm (gap filled completely		-/120/120
Single cables - max 25 - 80 mm dia.	40 - 150		Required as per B.2, thickness (t_B) ≥ 50 mm (gap filled completely		-/120/60
Cable bundle - Electrical or data, bundled up to 20 mm dia. maximum dia. of single cable 25 mm	up to 40		Optional		-/120/120
Cable bundle - Electrical or data - bundled up to 100 mm, maximum dia. of single cable 21 mm	up to 150		Required as per B.2, thickness (t_B) ≥ 50 mm (gap filled completely		-/120/90

APPENDIX - UL-AU CERTIFICATE

Certificate No. UL-AU-230008
Page 33/97
Date of Issue 2024-10-02

Service (C)	Aperture Size (Do): Diameter in mm or equivalent	Thickness/ Depth of Sealant (Ts) mm	Backing Material (B)	Seal Type	FRL
Small steel conduits and tubes, diameter ≤ 16 mm, arranged linear, with or without cables	Up to 150	Full depth of plasterboard lining thickness 2 x 13mm = 26mm 2 x 16mm = 32mm	Required as per B.2, thickness (t_B) ≥ 50 mm (gap filled completely	Seal type 3.3	-/120/120*
Single small plastic conduits and tubes, diameter ≤ 16 mm, arranged linear, with or without cables	Up to 40		Optional		-/120/120**
	40 - 150		Required as per B.2, thickness (t_B) ≥ 50 mm (gap filled completely		
Plastic conduits, diameter 16 ≤ Ø ≤ 32 mm, wall thickness 1 – 3 mm, arranged linear or in a cluster, with or without cables	40 - 150		Required as per B.2, thickness (t_B) ≥ 50 mm (gap filled completely		-/120/120**

Conduits:
Seal depth: Minimum 23 mm or full depth of collar and finish flush with or without backing

*Pipe FRL are pipe end configuration C/U (C=Capped, U= Uncapped)
**Pipe FRL are pipe end configuration U/C (U= Uncapped, C=Capped)

APPENDIX - UL-AU CERTIFICATE

Certificate No. UL-AU-230008
Page 34/97
Date of Issue 2024-10-02

CP 611A sealant installation configurations – Seal types

Seal Type 3.4

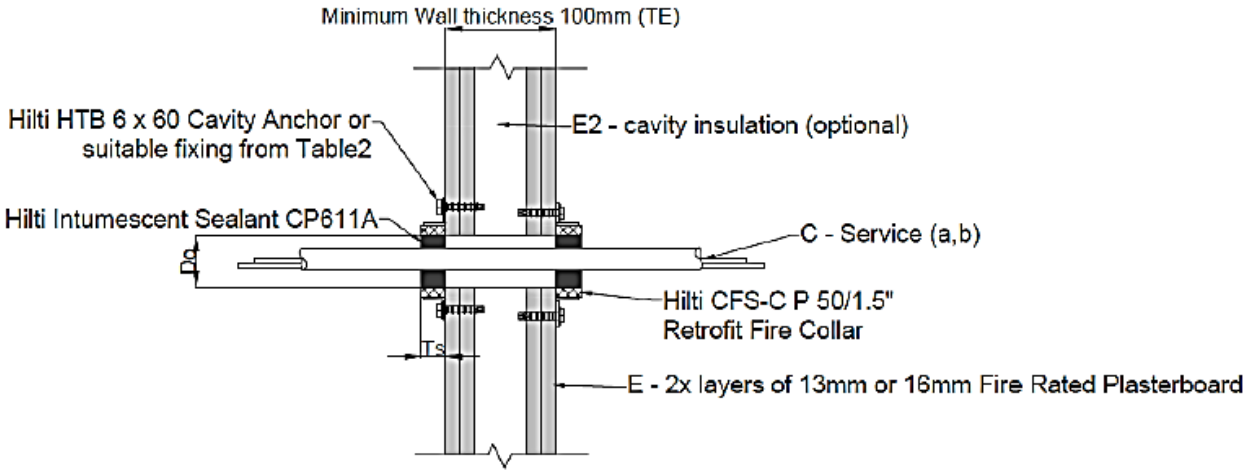

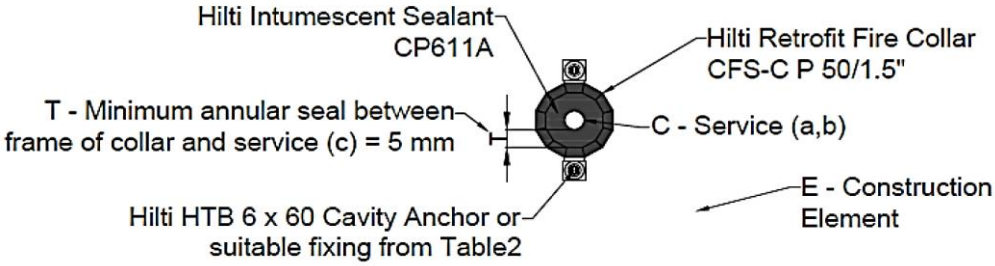

Service	Conduit size (mm)	Collar Code	Thickness/depth of sealant	Construction details	Walls
PVC conduit empty to filled with optic fibre & electrical cables	16mmx 1.75mm	Hilti Firestop Collar CP 644/CFS-C P-50/1.5	Minimum 23mm or full depth of collar	Seal type 3.4	-/120/60
	20mmx 1.95mm				
	25mmx 1.95mm				
	32mmx2.25mm				
	40mmx2.55mm				

APPENDIX - UL-AU CERTIFICATE

Certificate No. UL-AU-230008
Page 35/97
Date of Issue 2024-10-02

C.3.2.2 D1 & D2 standard cable configuration, with or without cable tray

Maximum seal size: 150 x 150 mm or circular openings of equivalent area

CP 611A sealant installation configurations – Seal types

Seal type 3.5

Backing: CFS CT B 1S or mineral wool backing as per B.2

Seal depth: full depth of plasterboard and finish flush

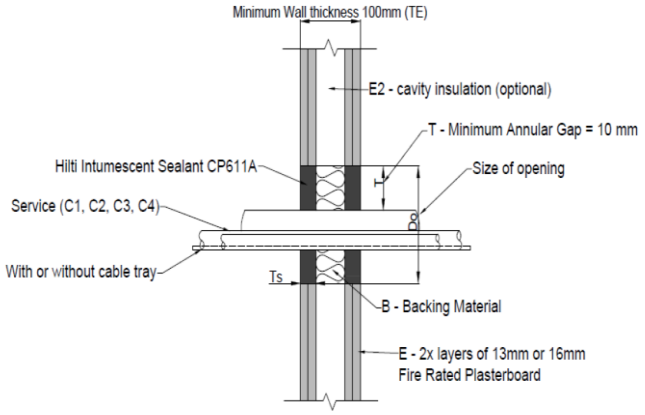

Seal type 3.6

Backing: CFS CT B 1S or mineral wool backing as per B.2

Seal depth: full depth of plasterboard

Additional protection: 2 x layer of Hilti CFS-P BA Putty Bandage with or without cable tray

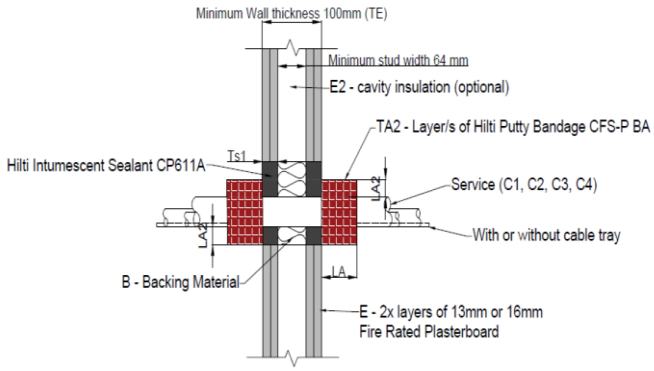

AS 1530.4:2014 D1 Standard Cable Sets, Front View

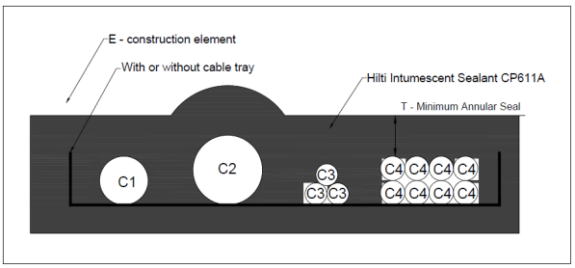

AS 1530.4:2014 D1 Standard Cable Sets, Front View

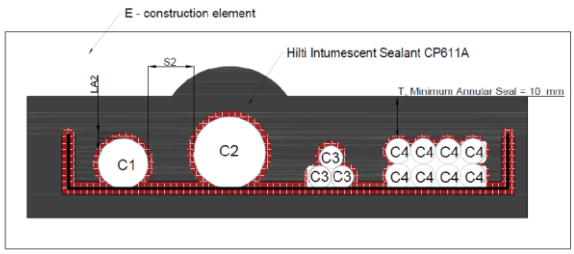

AS 1530.4:2014 D2, Standard Cable Sets, Front View

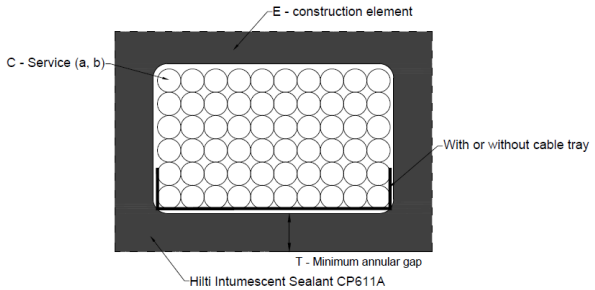

AS 1530.4:2014 D2, Standard Cable Sets, Front View

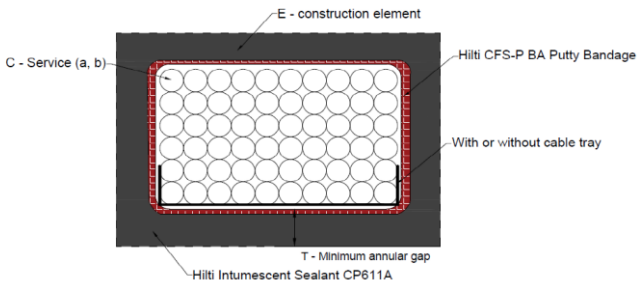

Certification Body **UL International New Zealand Limited**
54 Tarndale Grove, Albany,
Auckland 0632, New Zealand.
+64 9 415 3355, customerservice.anz@ul.com,
https://au-nz.ul.com

APPENDIX - UL-AU CERTIFICATE

Service	Thickness/Depth of Sealant mm	Minimum Annular Gap	Backing Material	Additional protection	Seal Type	FRL
PVC Insulated Power Cables with Cable Tray. (Standard D1 Cable Set, in accordance with AS 1530.4:2014 Appendix D)	Full depth of plasterboard lining thickness 2 x 13mm = 26mm 2 x 16mm = 32mm	10	CFS CT B 1S or mineral wool backing mineral wool backing 100 kg/m^3	Not required	Seal type 3.5	-/120/60
PVC Insulated Power Cables with Cable Tray. (Standard D2 Cable Set, in accordance with AS 1530.4:2014 Appendix D)	Full depth of plasterboard lining thickness 2 x 13mm = 26mm 2 x 16mm = 32mm	10	CFS CT B 1S or mineral wool backing mineral wool backing 100 kg/m^3	2 x layer of Hilti CFS-P BA Putty Bandage with or without cable tray*	Seal type 3.6	-/120/120

*If cable tray going through wall, 1 x layer of Hilti CFS-P BA Putty Bandage on top of cable. One layer is then required to be wrapped around the cable tray

*When there is no cable tray sustained through the opening, the cables must be rigidly supported within 200mm from the wall and 2 x layers of Hilti Firestop Putty Bandage CFS-P BA must be wrapped around the individual cables/cable bundles on both sides of the wall.

APPENDIX - UL-AU CERTIFICATE

Certificate No. UL-AU-230008
Page 37/97
Date of Issue 2024-10-02

C.3.3 Plumbing and sprinkler services

C.3.3.1 PEX and gas Pex

Service configuration
Service, single or bundled services achieve the specified FRL as through penetration as well as rough in configurations, including S, C, L configurations as per C.1.5

CP 611A sealant installation configurations – Seal types

Seal type 3.7

Seal depth: full depth of plasterboard or min 25 mm depth for rigid wall, and finish flush with or without backing

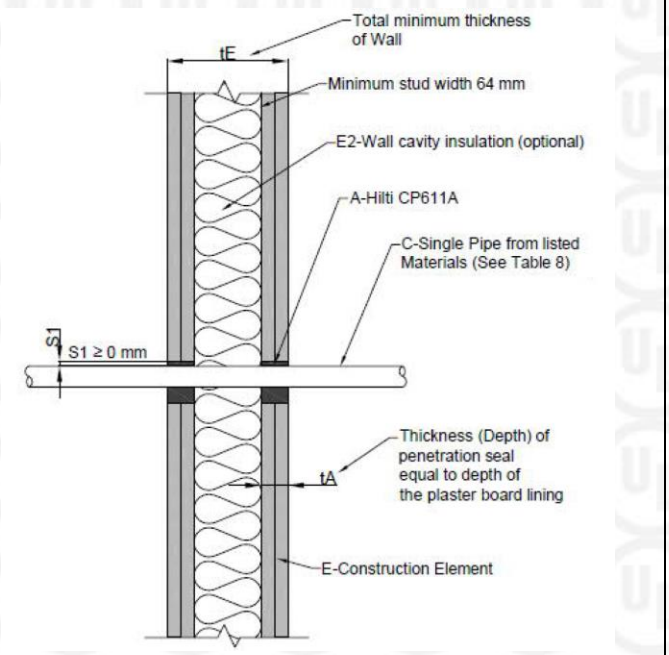

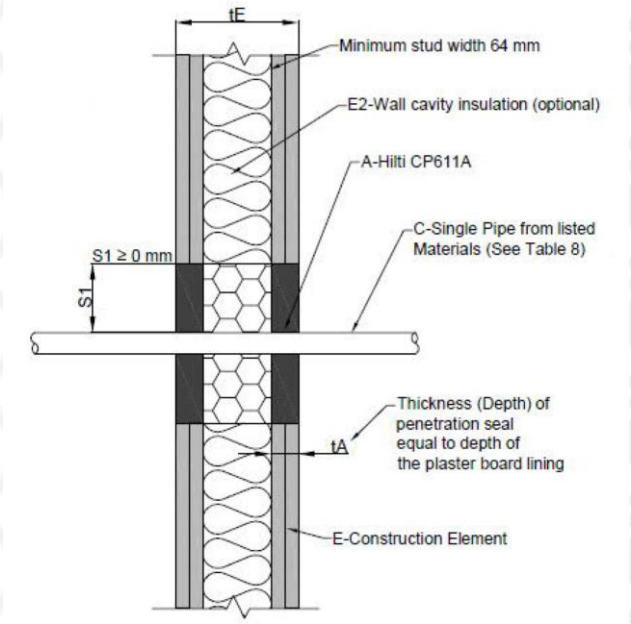

Front view

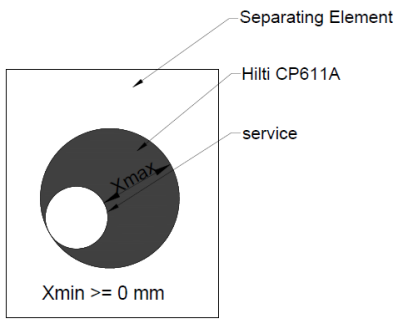

Certification Body **UL International New Zealand Limited**
54 Tarndale Grove, Albany,
Auckland 0632, New Zealand.
+64 9 415 3355, customerservice.anz@ul.com,
https://au-nz.ul.com

APPENDIX - UL-AU CERTIFICATE

Certificate No. UL-AU-230008
Page 38/97
Date of Issue 2024-10-02

Pipe Service	Pipe Diameter mm)	Pipe Wall Thickness Range (mm)	Hole Diameter Range (mm)	Hole Diameter Range (mm)*	x min	Sealant depth	FRL (Seal type 3.7)
PE-Xa according to AS 2492:2007	16	1.2 – 2.4	26 - 38	36 - 150	0	Full depth of plasterbaord wall lining or min 25 mm depth for rigid wall	-/120/120
	20	2.3 – 3.4	30 - 40	40 - 150			
	25	2.8 – 3.9	35 - 48	48 - 150			
	32	2.2 – 4.0	35 - 48	48 - 150	5		-/90/90*
PE-Xb according to AS 2492:2007	16	1.2 – 2.4	26 - 38	36 - 150	0		-/120/120
	20	2.3 – 3.4	30 - 40	40 - 150			
	25	2.8 – 3.9	35 - 48	48 - 150			
PE-Xa/Al/PE	16	2.0 – 2.6	26 - 38	36 - 150	0		-/120/120
	20	2.3 – 2.9	30 - 40	40 - 150			
	25	3.5 - 3.7	40 - 48	48 - 150			
	32	3.5 - 4.7	48 - 54	54 - 150			-/120/90

*Pipe FRL are pipe end configuration U/C (U= Uncapped, C=Capped)

APPENDIX - UL-AU CERTIFICATE

Certificate No. UL-AU-230008
Page 39/97
Date of Issue 2024-10-02

Seal type 3.8

Seal depth: 25 mm depth on both sides of rigid wall only, and finish flush with or without backing

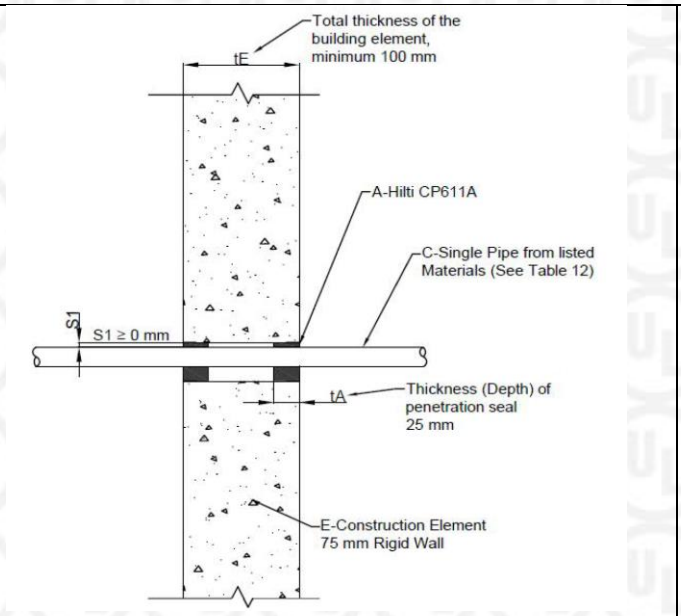

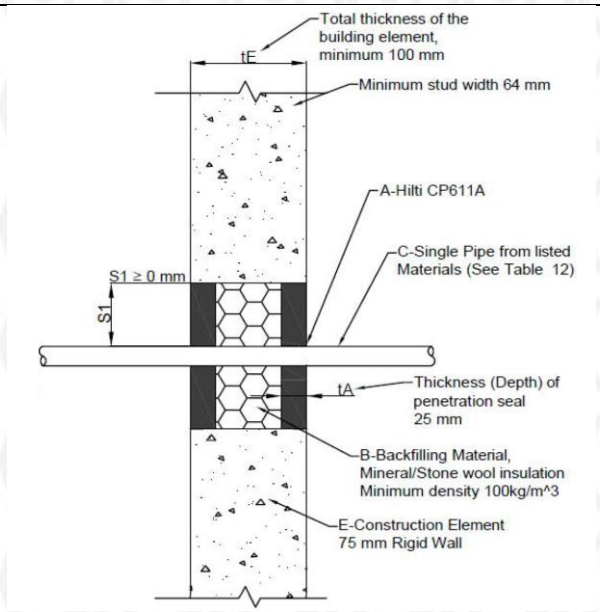

Front view

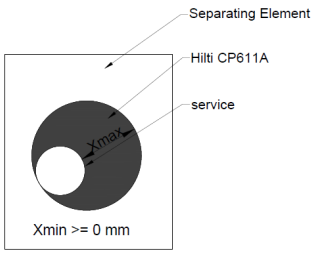

Pipe Service	Pipe Diameter (mm)	Pipe Wall Thickness Range (mm)	Hole Diameter Range (mm)	Hole Diameter Range (mm)*	x min	Sealant depth	FRL (Seal type 3.8)
PE-X/AI/PE	16	2.0 – 2.6	26 – 38	36 - 150	0	Full depth on both sides for rigid wall	-/120/120
	20	2.3 – 2.9	30 – 40	40 - 150			
	25	3.5 – 3.7	40 – 48 –	48 - 150			
	32	3.5 – 4.7	48 – 54	54 –150			-/120/90

*For large aperture, sealant in annular gap shall consist of Hilti Firestop Intumescent CP611A and Mineral wool backfilling material as per B.2

APPENDIX - UL-AU CERTIFICATE

Certificate No. UL-AU-230008
Page 40/97
Date of Issue 2024-10-02

C.3.3.2 UPVC and proprietary pipe

CP 611A sealant installation configurations – Seal types

Seal type 3.9

Seal depth: full depth of plasterboard and finish flush with backing

Single pipes without insulation:	Single pipes continious sustained insulation:	Single pipes local sustained insulation:
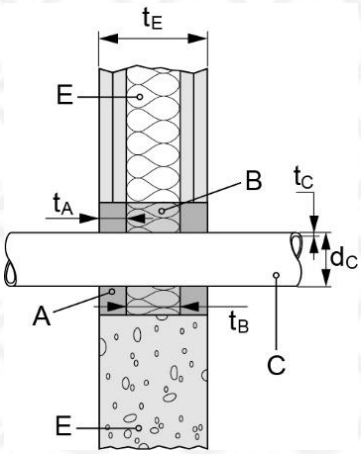	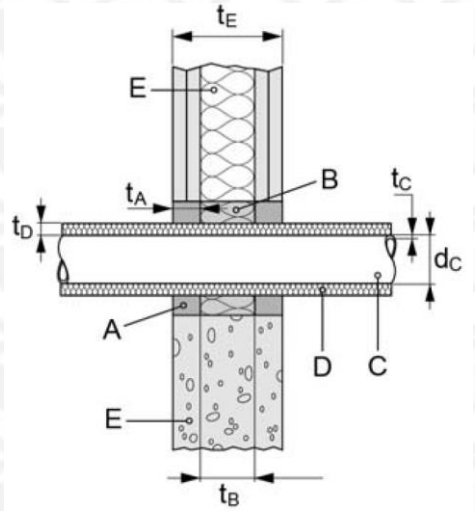	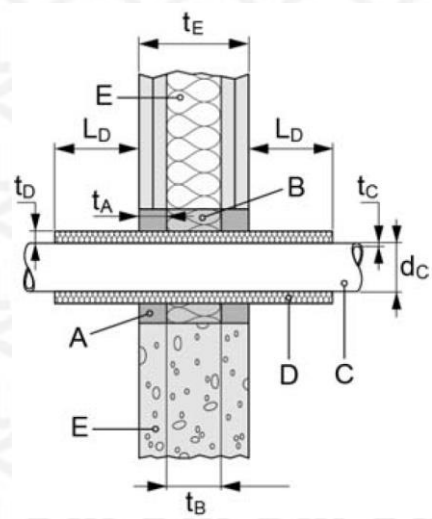
Front view	Front view	Front view
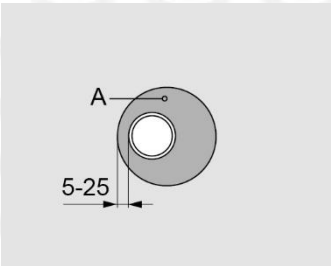	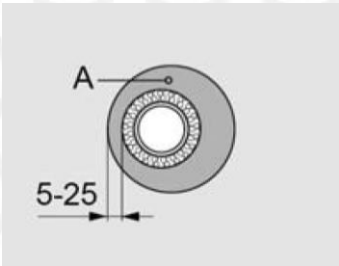	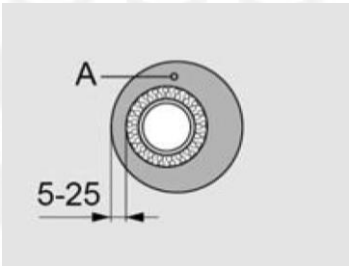
5 mm <= X <= 25 mm	5 mm <= X <= 25 mm	5 mm <= X <= 25 mm

C.3.3.2.1 uPVC pipes according to AS 1260, not insulated

diameter (d_C) [mm]	wall thickness (t_C) [mm]	FRL (Fire Resistance Level) Seal type 3.9
≥ 16 - 20	1.8 – 2.2	-/120/120*
32	1.8 – 3.6	-/120/60*
≥ 32 - 40	1.9 – 3.6	-/90/90*
≥ 40 - 50	1.8 – 3.7	-/120/90**

*Pipe FRL are pipe end configuration U/U (U=Uncapped, U= Uncapped)
**Pipe FRL are pipe end configuration U/C (U= Uncapped, C=Capped)

APPENDIX - UL-AU CERTIFICATE

C.3.3.2.2 Geberit Mepla, Aluminium composite pipes PE-XD/Al/PE-HD, not insulated or local insulated with Armaflex AF pipe insulation Local Sustained (LS*) or Continued Sustained (CS)				
Pipe		Insulation		FRL (Fire Resistance Level) Seal type 3.9
diameter (d_C) [mm]	wall thickness (t_C) [mm]	thickness (t_D) [mm]	length (L_D) [mm]	
≥ 16 - 50	2.25 – 4.0	-	-	-/120/60*
≥ 16 - 50	2.25 – 4.0	8 - 21	*≥ 250	-/90/90*

C.3.3.2.3 Geberit Silent, PP pipes PP-C/PP-MD/PP-C, not insulated		
Pipe		FRL (Fire Resistance Level)
diameter (d_C) [mm]	wall thickness (t_C) [mm]	
≥ 32 - 40	2.0	-/90/90**
50	2.0	-/120/90*

C.3.3.2.4 Kekelit Kelox, Aluminium composite pipes PE-XB/Al/PE-XB, not insulated or local insulated with Armaflex AF pipe insulation Local Sustained (LS*) or Continued Sustained (CS)				
Pipe		Insulation		FRL (Fire Resistance Level) Seal type 3.9
diameter (d_C) [mm]	wall thickness (t_C) [mm]	thickness (t_D) [mm]	length (L_D) [mm]	
16	2.0	-	-	-/120/120*
16	2.0	8 - 17	*≥ 250	-/120/120*
≥ 16 - 50	2.0 - 4.0	-	-	-/120/90*
≥ 16 - 50	2.0 - 4.0	8 - 21	*≥ 250	-/120/90*

C.3.3.2.5 LK Schweden, Aluminium composite pipes PE-RT/Al/PE-RT, not insulated or local insulated with Armaflex AF pipe insulation Local Sustained (LS*) or Continued Sustained (CS)				
Pipe		Insulation		FRL (Fire Resistance Level) Seal type 3.9
diameter (d_C) [mm]	wall thickness (tc) [mm]	thickness (t_D) [mm]	length (L_D) [mm]	
≥ 16 - 40	2.0 - 3.5	-	-	-/90/60*
≥ 16 - 40	2.0 - 3.5	8 - 21	*≥ 250	-/90/90*

C.3.3.2.6 LK Schweden, Aluminium composite pipes PE-RT/Al/PE-RT, inside PVC corrugated pipe Local Sustained (LS*)				
Pipe		PVC corrugated pipe (t_C) 1 mm		FRL (Fire Resistance Level) Seal type 3.9
diameter (d_C) [mm]	wall thickness (tc) [mm]	diameter [mm]	length (L_D) [mm]	
≥ 16 - 32	2.0 - 4.0	25 - 44	*≥ 250	-/120/90*

*Pipe FRL are pipe end configuration U/C (U= Uncapped, C=Capped)
**Pipe FRL are pipe end configuration U/U (U=Uncapped, U= Uncapped)

APPENDIX - UL-AU CERTIFICATE

C.3.3.2.7 LK Schweden, PEXa pipes, inside PVC corrugated pipe Local Sustained (LS*)				
Pipe		PVC corrugated pipe (tc) 1 mm		FRL (Fire Resistance Level) Seal type 3.9
diameter (d_C) [mm]	wall thickness (tc) [mm]	diameter [mm]	length (L_D) [mm]	
≥ 16 - 25	2.2 - 3.5	25 - 34	*≥ 250	-/120/120*

C.3.3.2.8 PP Life Master 3, PP pipes PP-CO/PP-MV/PP-CO (EN 1451-1), not insulated		
Pipe		FRL (Fire Resistance Level) Seal type 3.9
diameter (d_C) [mm]	wall thickness (t_C) [mm]	
≥ 32 - 40	1.8	-/120/120**
50	1.8	-/90/90*

C.3.3.2.9 Aluminium composite pipes PE-RT/Al/PE-RT (including Uponor Uni Pipe Plus, KELIT KELOX KM 110 and Viega, not or local insulated with Armaflex AF pipe insulation Local Sustained (LS*) or Continued Sustained (CS)				
Pipe		Insulation		FRL (Fire Resistance Level) Seal type 3.9
diameter (d_C) [mm]	wall thickness (t_C) [mm]	thickness (t_D) [mm]	length (L_D) [mm]	
≥ 16 - 32	2.0 - 3.5	-	-	-/120/60*
≥ 16 - 32	2.0 - 3.5	8 – 19.5	*≥ 250	-/120/90*

*Pipe FRL are pipe end configuration U/C (U= Uncapped, C=Capped)
**Pipe FRL are pipe end configuration U/U (U=Uncapped, U= Uncapped)

APPENDIX - UL-AU CERTIFICATE

Certificate No. UL-AU-230008
Page 43/97
Date of Issue 2024-10-02

C.3.4 HVAC services

Service description
The section covers FR pair coil and insulated metal pipe, where pipe can be either copper or metal pipe as per specification and insulation shall be **Foamed elastomeric insulation as per B.3**

Service configuration
Service, single or bundled services achieve the specified FRL as through penetration as well as rough in configurations, including S, C, L configurations as per C.1.5

Service variation allowed
Single insulated copper pipe also covered when pipe size provided copper pipe size 6.35-19.05, insulation 13 – 19, install as per respective configuration, with cable and/or condensation pipe
Max two single insulated copper pipe can be put together provided copper pipe size 6.35-19.05, insulation 13 – 19 mm install as per respective configuration, without cable and/or condensation pipe

Seal type 3.10
Seal depth: full depth of plasterboard and coning 30 x 30 mm, both sides

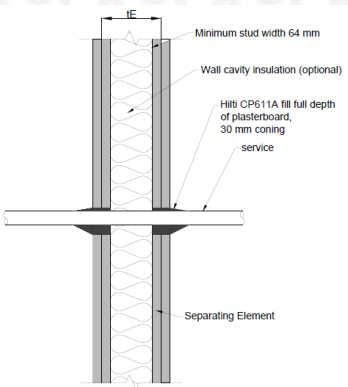

Front view

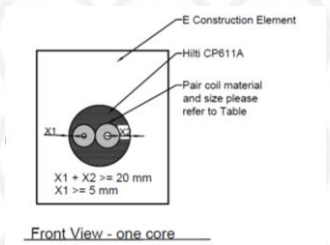

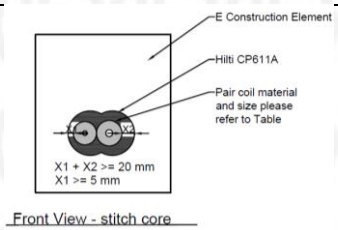

Seal type 3.11
Seal depth: full depth of plasterboard, both sides
Additional wrapping: 2 layers of CFS-P BA putty bandage

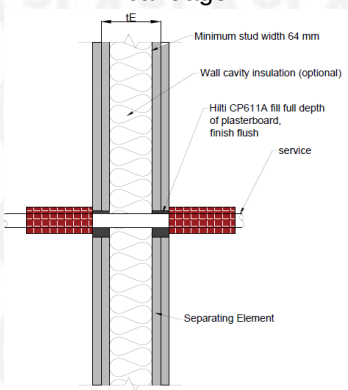

Front view

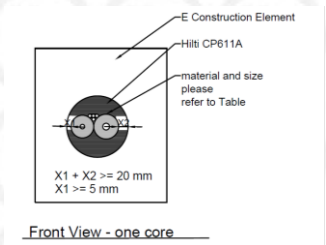

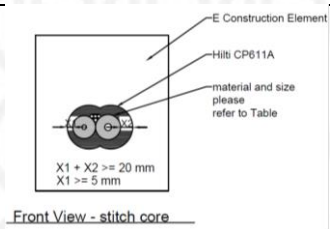

Certification Body
UL International New Zealand Limited
54 Tarndale Grove, Albany,
Auckland 0632, New Zealand.
+64 9 415 3355, customerservice.anz@ul.com,
https://au-nz.ul.com

APPENDIX - UL-AU CERTIFICATE

C.3.4.1 HVAC – pair coil configuration

Pair coil tube size		Insulation thickness (mm)	Minimum aperture size (mm)	Maximum aperture size (mm)	Seal type	FRL
mm	Inch					
6.35-9.52	1/4-3/8	13 or 19	Penetrant outer diameter + minimum 20 mm, stitch core allowed	125 mm diameter or equivalent area	Seal type 3.10	-/120/120
6.35-12.7	1/4-1/2	13 or 19				-/120/120
6.35-15.88	1/4-5/8	13 or 19				-/120/120
9.5-15.99	3/8-5/8	13 or 19				-/120/120
9.5-19.05	3/8-3/4	13 or 19				-/120/120

C.3.4.2 HVAC – pair coil with cable configuration

Pair coil tube size		Insulation thickness (mm)	Cable type	Minimum aperture size (mm)	Maximum aperture size (mm)	Seal type	FRL
mm	Inch						
6.35-9.52	1/4-3/8	13 or 19	• 1 × power cable up to 2.5 mm² • 1 x CAT data cable up to 1.0 mm²	Penetrant outer diameter + minimum 20 mm, stitch core allowed	125 mm diameter or equivalent area	Seal type 3.11	-/120/120
6.35-12.7	1/4-1/2	13 or 19					-/120/120
6.35-15.88	1/4-5/8	13 or 19					-/120/120
9.5-15.99	3/8-5/8	13 or 19					-/120/120
9.5-19.05	3/8-3/4	13 or 19					-/120/120

C.3.4.3 HVAC – condensation pipe configuration

Condensation pipe type	Pipe outer diameter (mm)	Aperture size (mm)	Seal type	FRL
1 × up to 25 mm uPVC corrugated condensation pipe	up to 25 mm	38 - 46	Seal type 3.10	-/120/120

APPENDIX - UL-AU CERTIFICATE

C.4 Flexible or rigid walls, tE ≥ 110 mm, wall type A.1.4

For detailed specifications of products covered, refers to section A.1

For detailed specifications of separating base material covered, refers to section A.1.1 - A.1.7

For detailed specifications of additional protections for metal pipe/insulated metal pipe to achieve better insulation rating, refers to B.2, B.3

For detailed specifications of backing material, refers to section B.1, B.4

For detailed specifications of backing rod size selection, refers to section C.1.5

For detailed specifications of fixings required into separating base material, refers to section C.1.3

For detailed specifications of rough in configurations, refers to section C.1.5

For detailed specifications of Aperture framing to locally build up the separating base material to required thickness, refers to section B.1.2

Opening size

Maximum seal size is 150 x 150 mm or openings of any shape of equivalent area, subject to the application

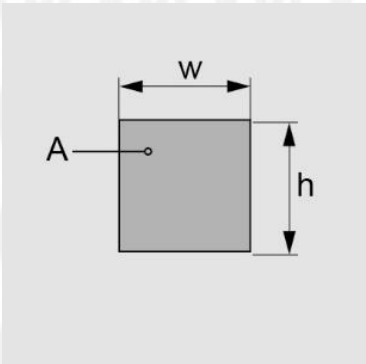

Annular gap between service and opening

Details on annular gap between service and base material specified in the solution table, as Xmin and Xmax, also defines the min and max opening size for the opening if opening size is not specified.

APPENDIX - UL-AU CERTIFICATE

Certificate No. UL-AU-230008
Page 46/97
Date of Issue 2024-10-02

When annular gap is not specified in the solution table,

Cables to edge of seal	s_1 =	0
Tied cable bundle to seal edge	s_1 =	10
Conduits Ø ≤ 16 mm to edge of seal	s_1 =	10
Conduits 16 ≤ Ø ≤ 32 mm to edge of seal	s_1 =	10

Mixed services

Mixed services within the same opening applies to approved applications in this section C.4

Mixed services in one opening - clear distance between services

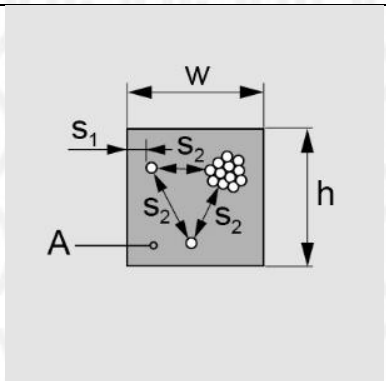

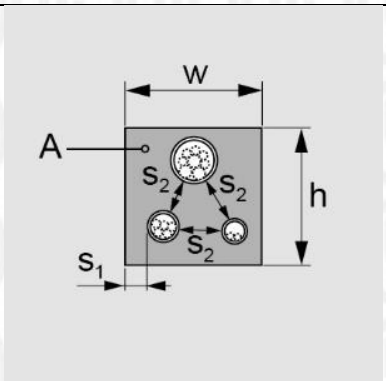

Minimum distances between services	Wall (mm)	
Cable to other cables / small conduits	s_2 =	0
Tied cable bundle to other small conduits	s_2 =	0
Conduits Ø ≤ 16 mm to other conduits Ø ≤ 16 mm	s_2 =	0
Conduit bundle to other conduit bundle (conduits from 16 to 32 mm)	s_2 =	10

APPENDIX - UL-AU CERTIFICATE

Certificate No. UL-AU-230008
Page 47/97
Date of Issue 2024-10-02

CP 611A sealant installation configurations – Seal types

Seal type 4.1	**Seal type 4.2**	**Seal type 4.3**
Single conduit or pipes without insulation: Seal depth: full depth of plasterboard, or min. 25 mm for rigid wall, finish flush with backing material as per B.2	Single pipes continuous sustained insulation: Seal depth: full depth of plasterboard, or min. 25 mm for rigid wall, finish flush with backing material as per B.2	Single pipes with local sustained insulation: Seal depth: full depth of plasterboard, or min. 25 mm for rigid wall, finish flush with backing material as per B.2
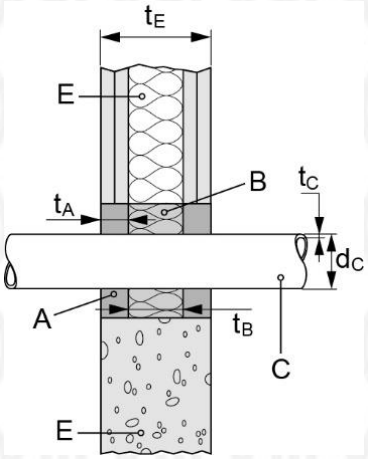	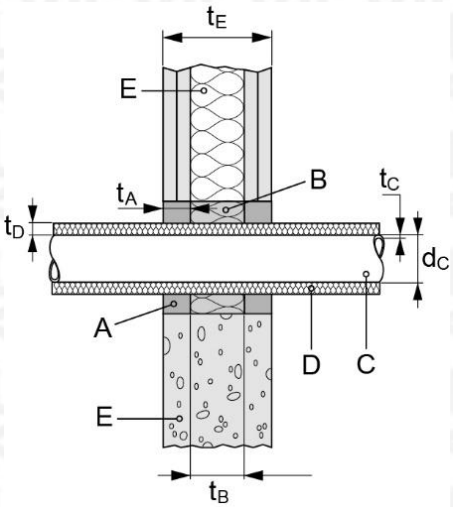	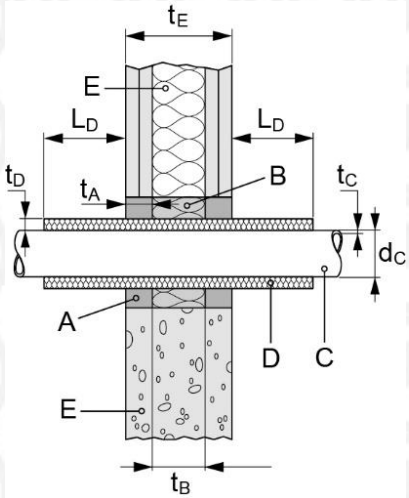
Front view 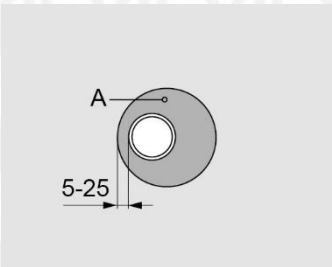	Front view 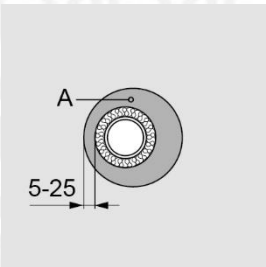	Front view 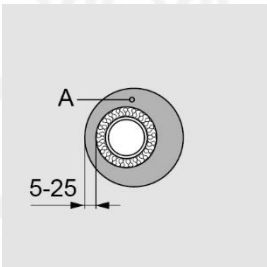
5 mm <= Xmin <= 25 mm	5 mm <= Xmin <= 25 mm	5 mm <= Xmin <= 25 mm

C.4.1 cable conduit

Service	Seal type	FRL (Fire Resistance Level)
Rigid, flexible and pliable plastic conduit up to Ø 40 mm with or without cables and conduits used pairwise up to Ø 80 mm; Flexible PVC conduit or PO conduit, wave height 4.5 mm	Seal Type 4.1	-/120/120*
Rigid, flexible and pliable plastic conduit up to Ø 40 mm with or without cables and conduits used pairwise up to Ø 80 mm	Seal Type 4.1	-/120/120*

*Pipe FRL are pipe end configuration U/U (U= Uncapped, U=Uncapped)

APPENDIX - UL-AU CERTIFICATE

C.4.2 Copper/steel pipes, locally insulated (LS) with mineral wool as per B.2				
Pipe		Insulation		FRL (Seal Type 4.3)
diameter (d_C) [mm]	wall thickness (t_C) [mm]	thickness (t_D) [mm]	Length each side (L_D) [mm]	
≥ 10 - 42	1.0 / 1.2 - 14.2	20	≥ 700	-/120/120*
≥ 42 - 89	1.2 / 2.0 - 14.2	40	≥ 925	-/120/120*

C.4.3 Copper/steel pipes, continuously insulated (CS) with Foamed elastomeric insulation as per B.3				
Pipe		Insulation		FRL (Seal Type 4.2)
diameter (d_C) [mm]	wall thickness (t_C) [mm]	thickness (t_D) [mm]	length (L_D) [mm]	
≥ 10 - 42	1.0 / 1.2 - 14.2	7.5 – 20.5	-	-/120/120*
≥ 42 - 89	1.2 / 2.0 - 14.2	14.5 – 22.5	-	-/120/60*

*Pipe FRL are pipe end configuration C/U (C=Capped, U= Uncapped)

APPENDIX - UL-AU CERTIFICATE

C.5 Proprietary walls And Rigid walls tE ≥ 75 mm, wall type A.1.5

For detailed specifications of products covered, refers to section A.1

For detailed specifications of separating base material covered, refers to section A.1.1 - A.1.7

For detailed specifications of additional protections for metal pipe/insulated metal pipe to achieve better insulation rating, refers to B.2, B.3

For detailed specifications of backing material, refers to section B.1, B.4

For detailed specifications of backing rod size selection, refers to section C.1.5

For detailed specifications of fixings required into separating base material, refers to section C.1.3

For detailed specifications of rough in configurations, refers to section C.1.5

For detailed specifications of Aperture framing to locally build up the separating base material to required thickness, refers to section B.1.2

Opening size

Maximum seal size is 150 x 150 mm or openings of any shape of equivalent area, subject to the application

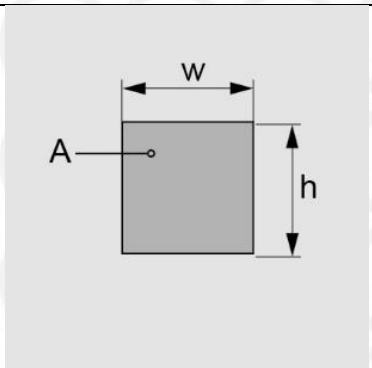

Annular gap between service and opening

Details on annular gap between service and base material specified in the solution table, as Xmin and Xmax, also defines the min and max opening size for the opening if opening size is not specified.

Minimum clear distance between individual opening shall be 40 mm

- When collar is used, the clear distance should be adjusted from edge of the collar casing
- When coning is needed, spacing must be adjusted so that the full coning can be achieved

APPENDIX - UL-AU CERTIFICATE

Mixed services

Mixed services within the same opening applies to approved applications in this section C.5, unless specified not covered in mixed service

Mixed services in one opening - clear distance between services

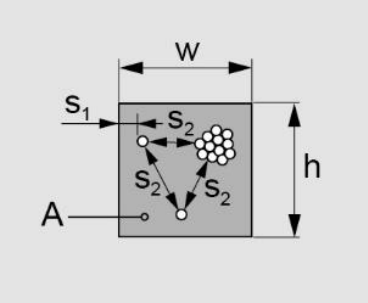

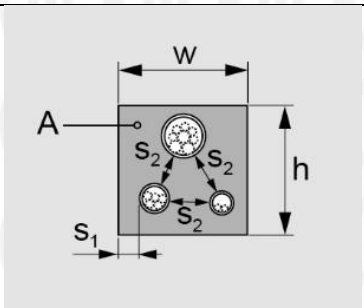

Minimum distance valid for installation services	Wall (mm)	
Distance between pipe and seal edge	s_1 =	5
Distance between pipe and seal edge (only where specifically allowed in section C.5	S_1 =	0
Clear distance between penetrations	s_2 =	40
Distance between pipe and Hilti CFS-C P 50/1.5” Retrofit fire collar	s_1 =	5
Distance between cable and seal edge	s_3 =	10

When mixed services through same opening, the FRL shall be derated to -/60/60

Service configurations specified in the section using the same installation configuration through 78 mm Speedpanel (E) can achieve the specified FRL given that:

- 78 mm Speedpanel has at least one layer of 13 mm or 16 mm fire rated plasterboard (E1) build up each side
- The edge of plasterboard build up is minimum 100 mm to the service core hole in all directions
- All grooves between the Speedpanel and fire rated plasterboard is filled with Hilti Firestop Acrylic sealant CP606 (A) at minimum 30 mm depth

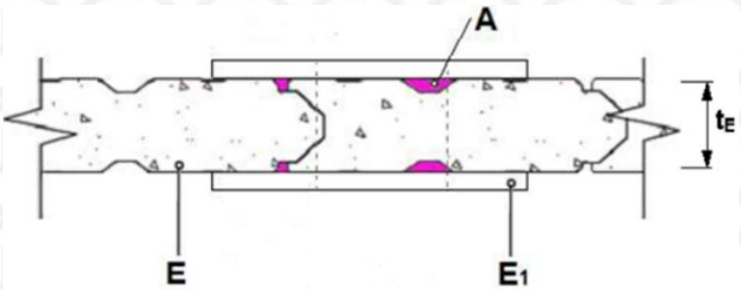

APPENDIX - UL-AU CERTIFICATE

Certificate No. UL-AU-230008
Page 51/97
Date of Issue 2024-10-02

C.5.1 Electrical services

Construction details Seal type

Seal type 5.1	**Seal type 5.2**	**Seal type 5.3**
Backing: backing rod as per B.4 Seal depth: minimum 25 mm depth and finish flush, both sides	Backing: no backing required Seal depth: full depth of base material, min. 75 mm finish flush on both sides, One side install allowed	Backing: backing rod as per B.4 Seal depth: min. 65 mm, finish flush with wall, One side install allowed
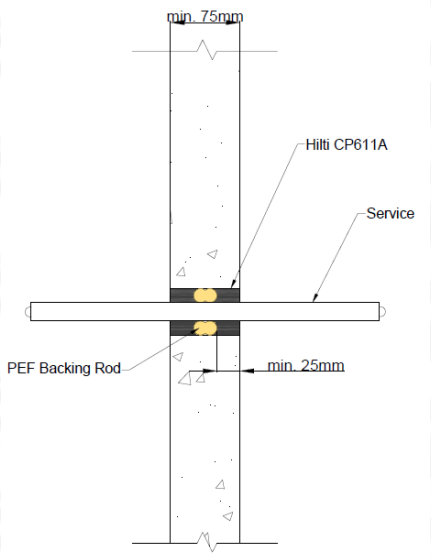	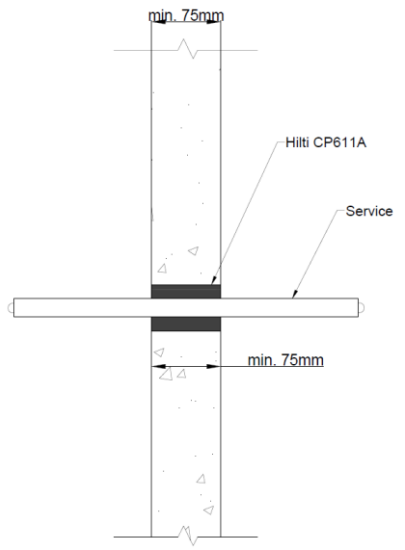	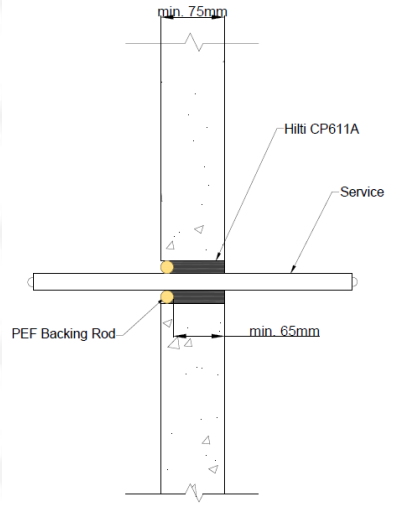
Front view 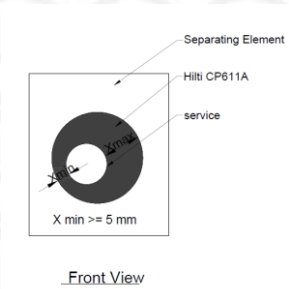	Front view 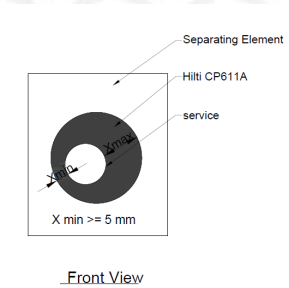	Front view 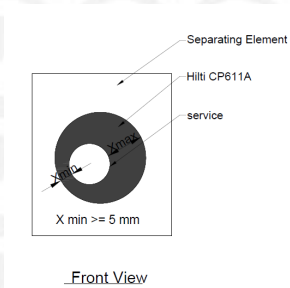

APPENDIX - UL-AU CERTIFICATE

Certificate No. UL-AU-230008
Page 52/97
Date of Issue 2024-10-02

Seal type 5.4	Seal type 5.5
Backing: backing rod as per B.4 Seal depth: minimum 25 mm depth and finish flush, both sides Additional protection: 2 x layer of Hilti CFS-P BA Putty Bandage around service	Backing: no backing required Seal depth: full depth of base material, min. 75 mm finish flush on both sides, One side install allowed Additional protection: 2 x layer of Hilti CFS-P BA Putty Bandage around service
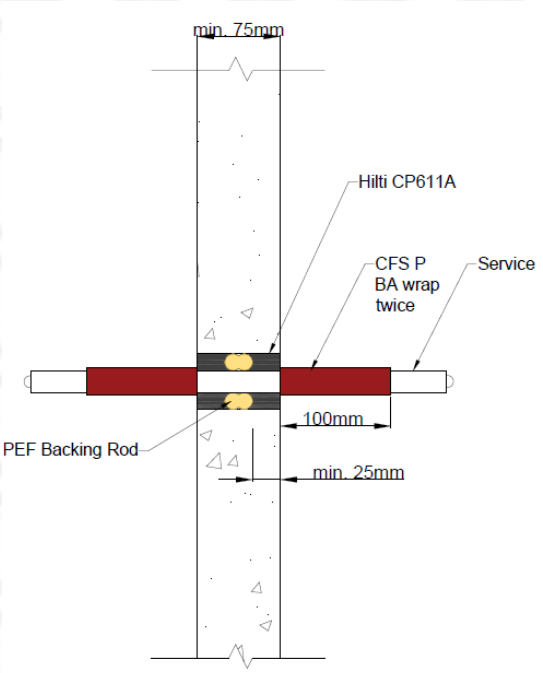	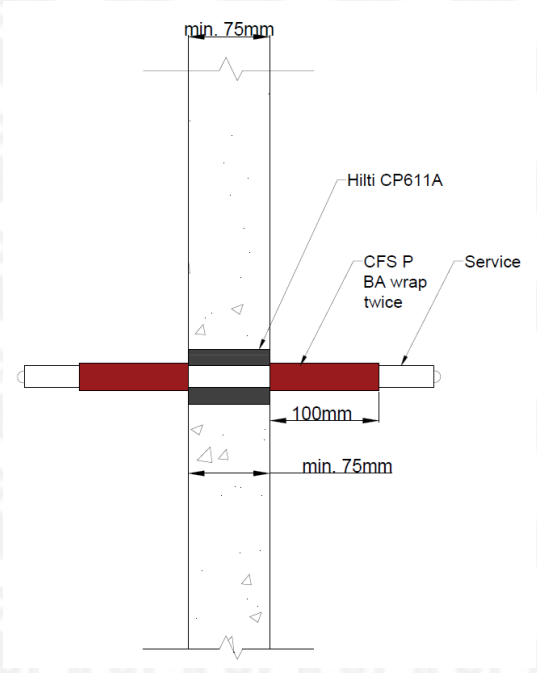
Front view 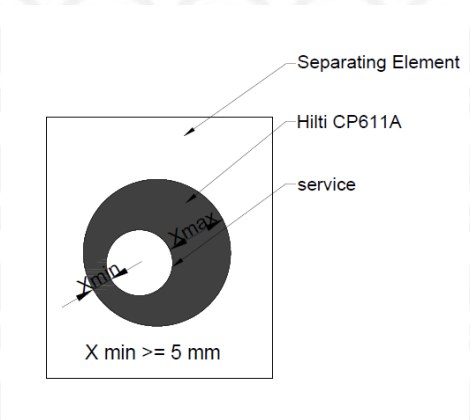	Front view 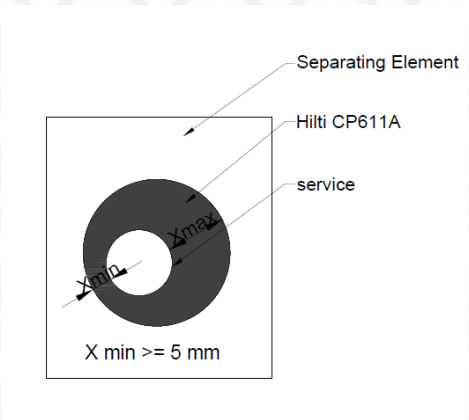

Certification Body
UL International New Zealand Limited
54 Tarndale Grove, Albany,
Auckland 0632, New Zealand.
+64 9 415 3355, customerservice.anz@ul.com,
https://au-nz.ul.com

APPENDIX - UL-AU CERTIFICATE

Certificate No. UL-AU-230008
Page 53/97
Date of Issue 2024-10-02

Seal type 5.6 Backing: backing rod as per B.4 Seal depth: minimum 25 mm depth and finish flush, both sides Coning: 50 x 20 mm, 50 mm along the service	**Seal type 5.7** Backing: no backing required Seal depth: full depth of base material, min. 75 mm finish flush on both sides Coning: 50 x 20 mm, 50 mm along the service
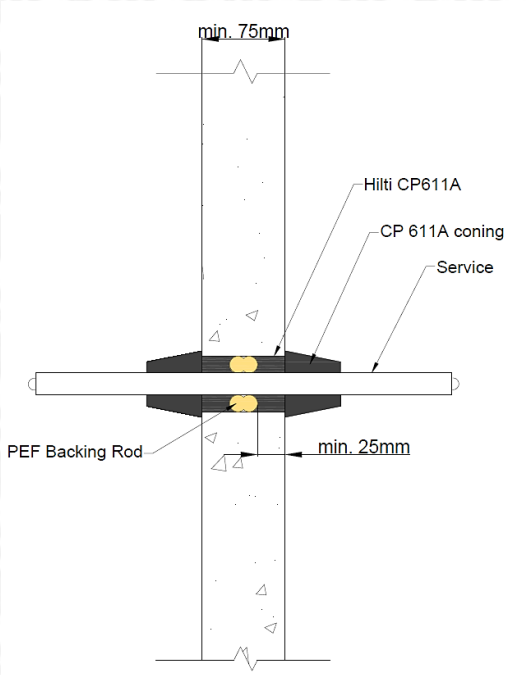	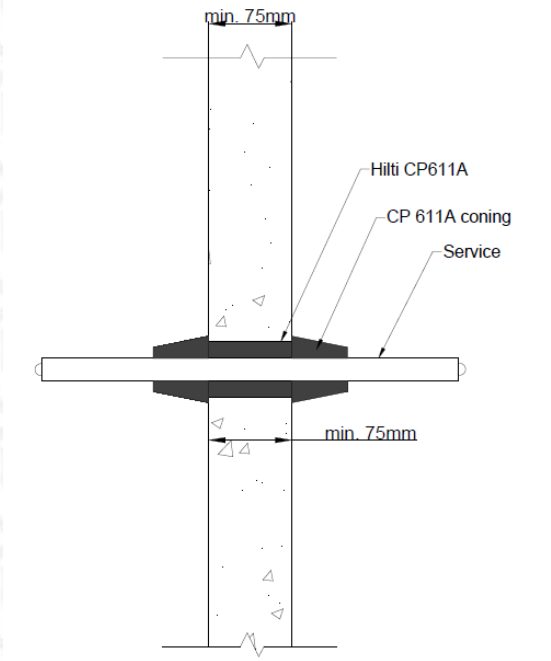 Single cable without backing rod
Front view 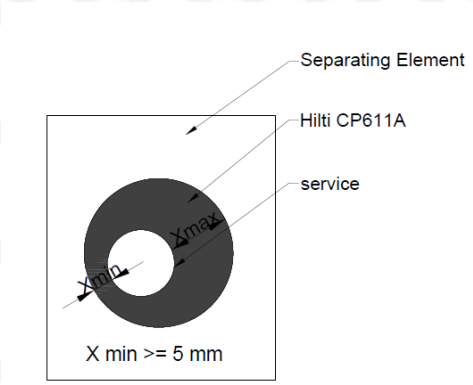	Front view 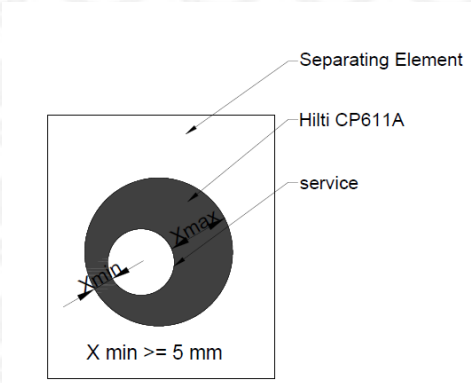

Certification Body **UL International New Zealand Limited**
54 Tarndale Grove, Albany,
Auckland 0632, New Zealand.
+64 9 415 3355, customerservice.anz@ul.com,
https://au-nz.ul.com

APPENDIX - UL-AU CERTIFICATE

Certificate No. UL-AU-230008
Page 54/97
Date of Issue 2024-10-02

Seal type 5.8

CFS-C P 50/1.5" with CP 611A filled full depth of the collar, 23 mm

CFS-C P collar needs to cover the opening, the seal type does not apply to mixed services

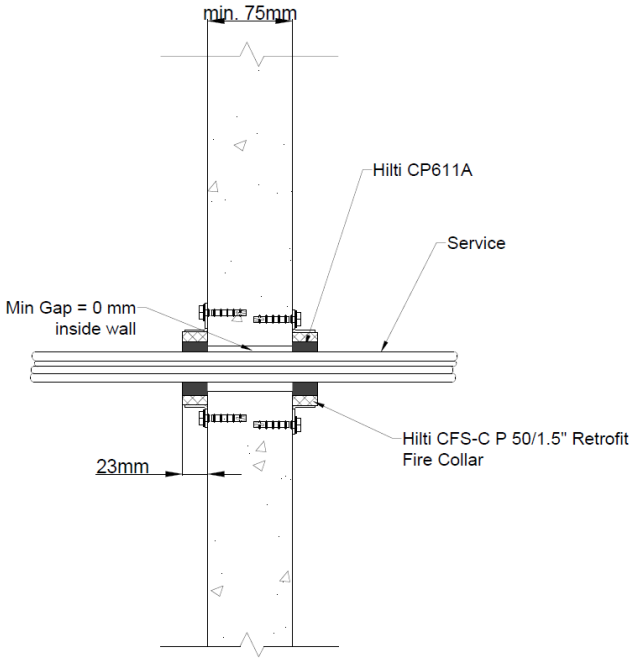

Front view

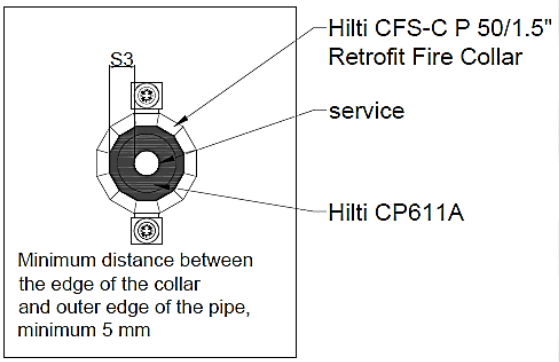

Seal type 5.9

CFS-C P 50/1.5" with CP 611A filled full depth of the collar, 23 mm, Additional protection: 2 x layer of Hilti CFS-P BA Putty Bandage around service

CFS-C P collar needs to cover the opening, the seal type does not apply to mixed services

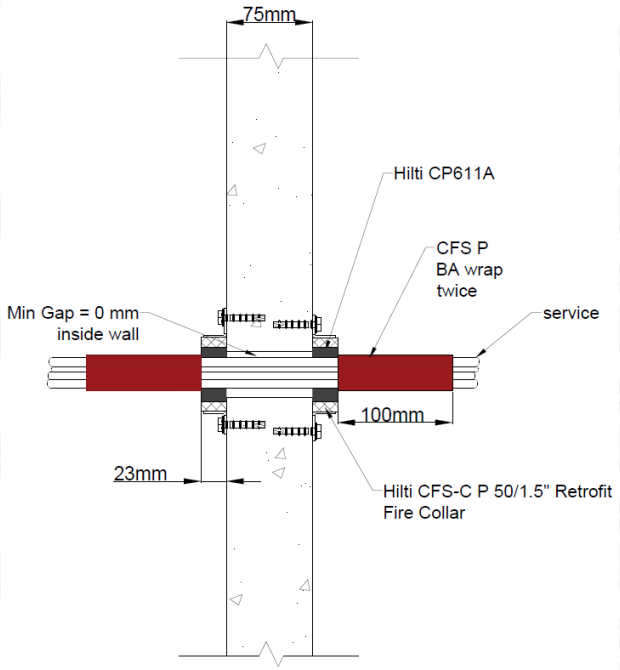

Front view

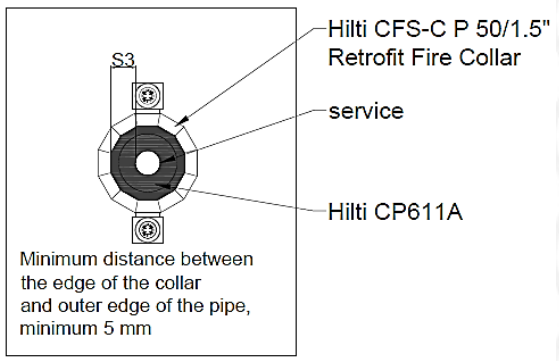

Certification Body

UL International New Zealand Limited
54 Tarndale Grove, Albany,
Auckland 0632, New Zealand.
+64 9 415 3355, customerservice.anz@ul.com,
https://au-nz.ul.com

APPENDIX - UL-AU CERTIFICATE

C.5.1.1 Single and bundled cable					
Service	Opening annular gap	Opening and Backing	Depth of sealant	FRL Seal type 5.1, 5.2	FRL Seal type 5.4, 5.5, 5.6, 5.7
Single Cable - Circular Sub-Mains, up to 16mm^2	Minimum annular gap between edge of the opening and service >=5 mm	Up to 40 mm diameter opening, PE backing rod as per B.4 and C.1.5 Up to 150x150 mm or equivalenet, mineral wool backing as per B.1	As per seal type, 25 each side / 65 mm / full depth of wall	-/120/60	-/120/120
Single Cable - Flat TPS up to 16mm^2 2C+E				-/120/120	-/120/120
Single Cable - RG6 Quad shield coax cables				-/120/120	-/120/120
Single Cable - Cat6 series, Data Cable				-/120/60	-/120/120

Service	annular gap	Opening and Backing	Depth of sealant	FRL Seal type 5.1, 5.2, 5.8	FRL Seal type 5.4, 5.5, 5.6, 5.7, 5.9
Cable bundle - all cables types specified in single cable table above, up to 36 mm cable bundle dia	Minimum annular gap between edge of the opening and service >=5 mm	Up to 50 mm diameter opening, PE backing rod as per B.4 and C.1.5 Up to 150x150 mm or equivalenet, mineral wool backing as per B.1	As per seal type, 25 each side / 65 mm / full depth of wall	-/120/30	-/120/120

APPENDIX - UL-AU CERTIFICATE

Certificate No. UL-AU-230008
Page 56/97
Date of Issue 2024-10-02

C.5.1.2 D1 & D2 standard cable configuration

CP 611A sealant installation configurations – Seal types

Seal type 5.10

Backing: CFS CT B 1S or mineral wool backing as per B.2

Seal depth: 25 mm + full depth of plasterboard aperture build up and finish flush

Coning: no required

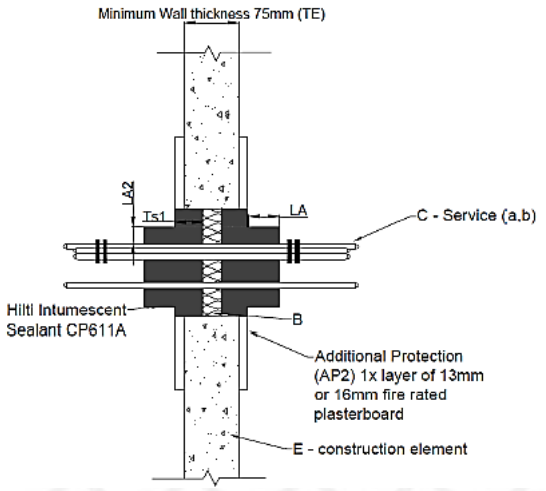

Seal type 5.11 for D2 set

Backing: CFS CT B 1S or mineral wool backing as per B.2

Seal depth: 25 mm + full depth of plasterboard aperture build up and finish flush

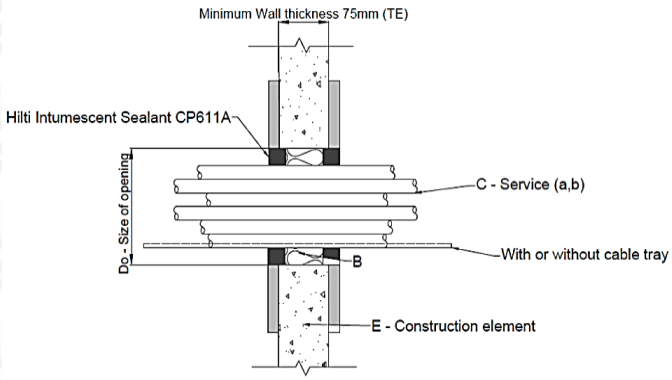

The below installation configurations apply to rigid wall ≥100 mm thick, with no aperture framing required

Seal type 5.12

Backing: CFS CT B 1S or mineral wool backing as per B.2

Seal depth: 25 mm and finish flush

Coning: no required

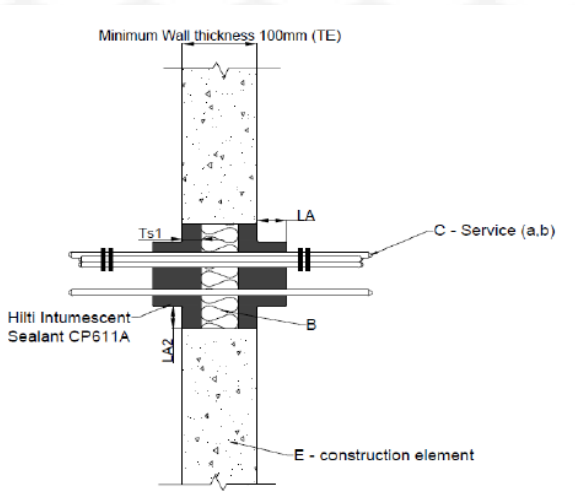

Seal type 5.13 for D2 set

Backing: CFS CT B 1S or mineral wool backing as per B.2

Seal depth: 25 mm and finish flush

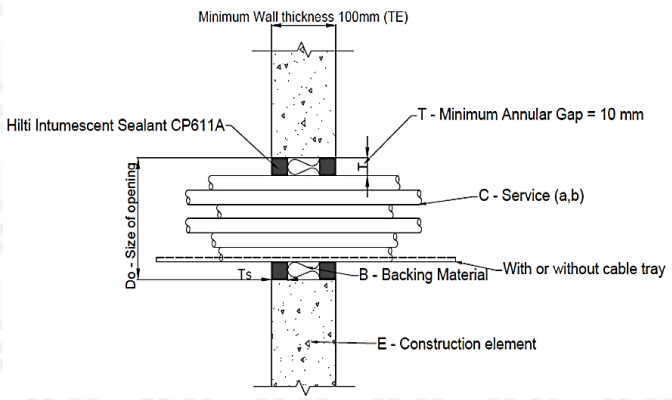

Certification Body **UL International New Zealand Limited**
54 Tarndale Grove, Albany,
Auckland 0632, New Zealand.
+64 9 415 3355, customerservice.anz@ul.com,
https://au-nz.ul.com

APPENDIX - UL-AU CERTIFICATE

Certificate No. UL-AU-230008
Page 57/97
Date of Issue 2024-10-02

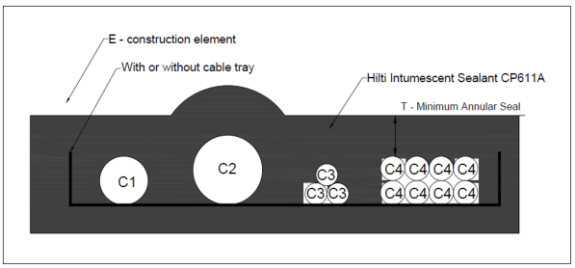

AS 1530.4:2014 D2, Standard Cable Sets, Front View

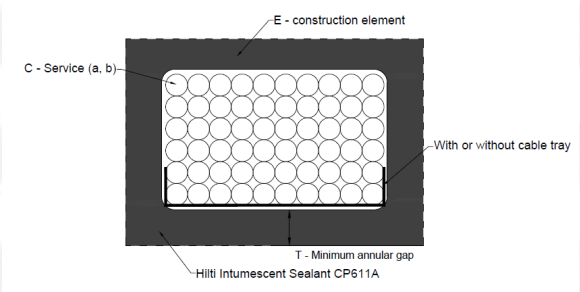

APPENDIX - UL-AU CERTIFICATE

Certificate No. UL-AU-230008
Page 58/97
Date of Issue 2024-10-02

Seal type 5.14 for D1 set

Backing: CFS CT B 1S or mineral wool backing as per B.2

Seal depth: 25 mm + full depth of plasterboard aperture build up and finish flush

Additional protection: 2 x layer of Hilti CFS-P BA Putty Bandage with or without cable tray

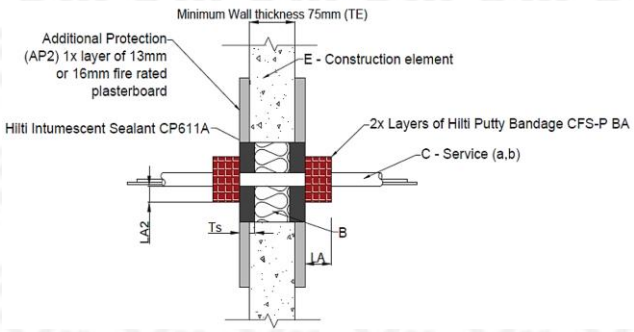

Seal type 5.15 for D2 set

Backing: CFS CT B 1S or mineral wool backing as per B.2

Seal depth: 25 mm + full depth of plasterboard aperture build up and finish flush

Additional protection: 2 x layer of Hilti CFS-P BA Putty Bandage with or without cable tray

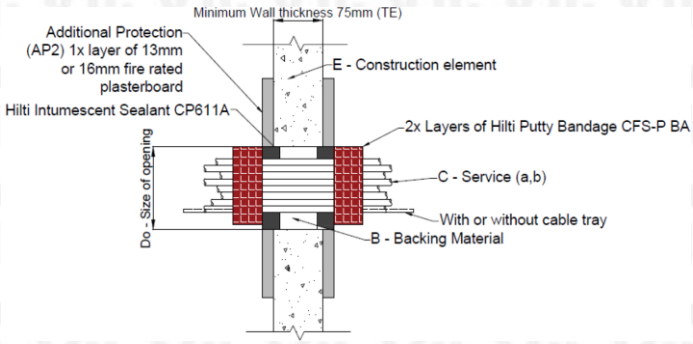

The below installation configurations apply to rigid wall ≥100 mm thick, with no aperture framing required

Seal type 5.16 for D1 set

Backing: CFS CT B 1S or mineral wool backing as per B.2

Seal depth: 25 mm and finish flush

Additional protection: 2 x layer of Hilti CFS-P BA Putty Bandage with or without cable tray

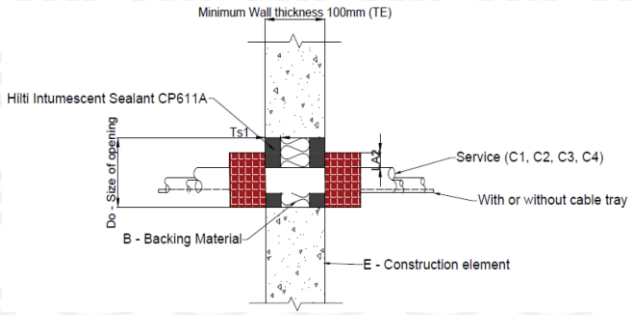

Seal type 5.17 for D2 set

Backing: CFS CT B 1S or mineral wool backing as per B.2

Seal depth: 25 mm and finish flush

Additional protection: 2 x layer of Hilti CFS-P BA Putty Bandage with or without cable tray

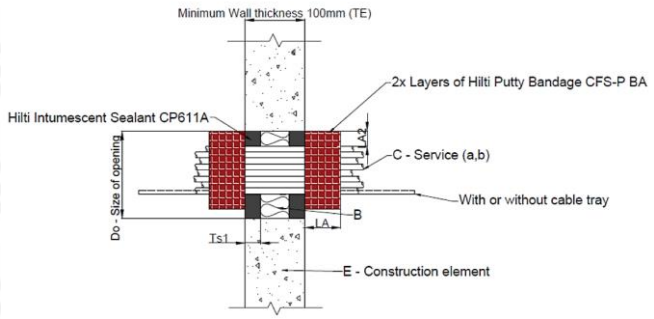

Certification Body **UL International New Zealand Limited**
54 Tarndale Grove, Albany,
Auckland 0632, New Zealand.
+64 9 415 3355, customerservice.anz@ul.com,
https://au-nz.ul.com

APPENDIX - UL-AU CERTIFICATE

Certificate No. UL-AU-230008
Page 59/97
Date of Issue 2024-10-02

AS 1530.4:2014 D1 Standard Cable Sets, Front View

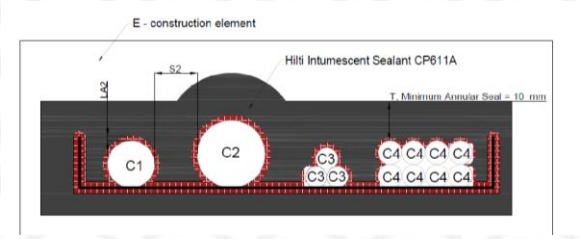

AS 1530.4:2014 D2, Standard Cable Sets, Front View

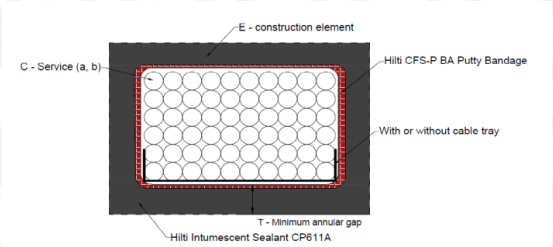

*Note, if the substrate is ≥100 mm, no aperture framing is required

Service	Additional aperture build up on base material	Depth of Sealant mm	Minimum Annular Gap	Opening size	Additional Sealing Requirements	Seal Type	FRL
PVC Insulated Power and Telecommunication Cables with or without Cable Tray. (Standard D1 & D2 Cable Set, in accordance with AS 1530.4:2014 Appendix D)	1 x 13 mm or 16 mm Fire rated plasterboard build up according to C.1.2	25 + depth of plasterboard build up if base material is less than 100 mm	10	Up to 150 x 150 mm or equivalent	Not Required, finish flush	Seal type 5.10, 5.12	-/120/60
					CFS-P BA putty bandage around service*	Seal type 5.11, 5.13	-/120/120

*If cable tray going through wall, 1 x layer of Hilti CFS-P BA Putty Bandage on top of cable. One layer is then required to be wrapped around the cable tray on both sides of the wall

*When there is no cable tray sustained through the opening, the cables must be rigidly supported within 200mm from the wall and 2 x layers of Hilti Firestop Putty Bandage CFS-P BA must be wrapped around the individual cables/cable bundles on both sides of the wall.

*For Dincel walls, an additional single layer of Hilti Firestop Putty Bandage CFS-P BA shall be provided next to the 2 × layers of putty bandage placed adjacent to the wall, on either side, externally, such that the total length of the putty bandage is 200mm

APPENDIX - UL-AU CERTIFICATE

C.5.1.3 Cable Conduit – plastic or metal

Plastic conduit

Service	cable within conduit	Minimum Diameter of the Opening (mm)	Maximum Diameter of the Opening, Do (mm)	annular gap	Depth of sealant	Seal type	FRL
Single uPVC rigid or corrugated conduit or NBN conduit 16 mm	Empty to fill, including all cable types and optic fibre cables	35	42	Minimum annular gap between edge of the opening and service >=5 mm	25 mm both sides with backing rod or full depth of wall	Seal type 5.1, 5.2	-/120/120
Single uPVC rigid or corrugated conduit or NBN conduit 20 mm		38	45				
Single uPVC rigid or corrugated conduit or NBN conduit 25 mm		45	50				
Single uPVC rigid or corrugated conduit or NBN conduit 32 mm		50	54				
For NBN conduit, the diameter refers to the pipe ID							

APPENDIX - UL-AU CERTIFICATE

Certificate No. UL-AU-230008
Page 61/97
Date of Issue 2024-10-02

Seal type 5.18	Seal type 5.19
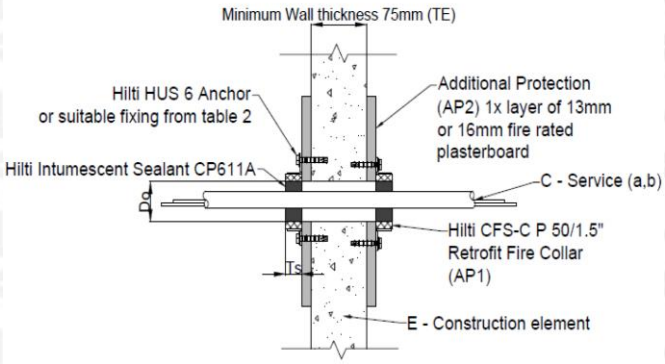	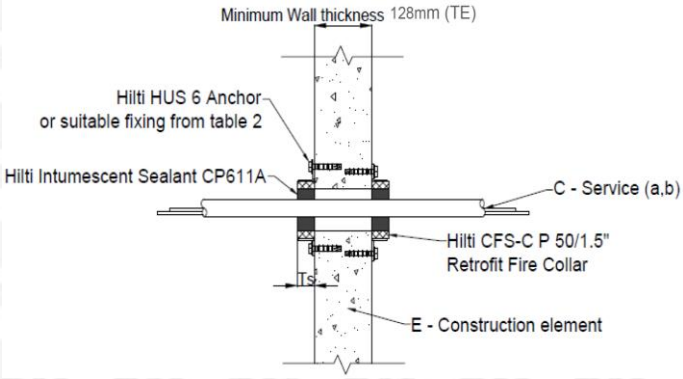

Service	Conduit Size (mm)	Fire Protection Method	Hole Diameter	Concrete Walls ≥ 75 mm, Seal type 5.18	Concrete Walls ≥ 128 mm, Seal type 5.19
uPVC conduit with optic fibre, electric cables or empty	16 mm x 1.75 mm bundle up to three	Hilti Fire Collar CFS-C P 50/1.5" + CP611a installed full depth of collar	Up to 50 mm	-/120/60	-/120/120
	20 mm x 1.95 mm bundle up to two				
	25 mm x 1.95 mm				
	32 mm x 2.55 mm				
	40 mm x 2.55 mm				

APPENDIX - UL-AU CERTIFICATE

Certificate No. UL-AU-230008
Page 62/97
Date of Issue 2024-10-02

Seal type 5.20 for steel conduit

Backing: CFS CT B 1S or mineral wool backing as per B.2

Seal depth: 25 mm and finish flush

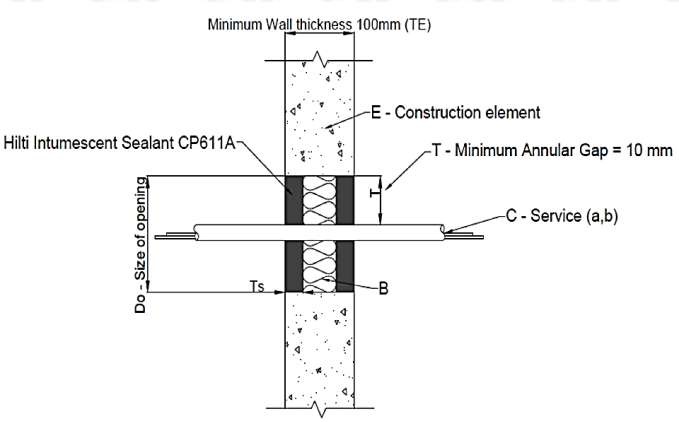

Seal type 5.21 for D1 set

Backing: CFS CT B 1S or mineral wool backing as per B.2

Seal depth: 25 mm + full depth of plasterboard aperture build up and finish flush

Additional protection: 2 x layer of Hilti CFS-P BA Putty Bandage

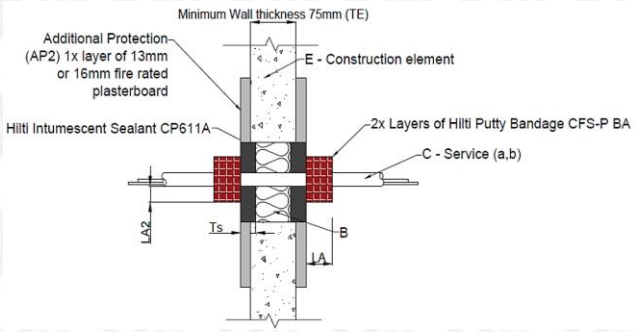

Steel conduit					
Service (C)	Additional aperture build up on base material	Thickness / Depth of Sealant (t_s) mm	Backing Material (B)	Seal Type	FRL
Single Steel conduits and tubes up to 16mm and 1.5mm (min) wall thickness with or without cables or optic fibre cables	1 x 13 mm or 16 mm Fire rated plasterboard aperture framing according to C.1.2 if the rigid wall is less than 100 mm thick	25 + depth of local aperture build up	Optional	Seal type 5.20	-/120/90
			Required	Seal type 5.21	-/120/120

APPENDIX - UL-AU CERTIFICATE

Certificate No. UL-AU-230008
Page 63/97
Date of Issue 2024-10-02

C.5.2 Plumbing and Sprinkler services

C.5.2.1 PEX and gas PEX

Construction details Seal type

Seal type 5.22	**Seal type 5.23**	**Seal type 5.24**
Backing: backing rod as per B.4 Seal depth: minimum 25 mm depth and finish flush, both sides	Backing: no backing required Seal depth: full depth of base material, min. 75 mm finish flush on both sides, one side install allowed	Backing: backing rod as per B.4 Seal depth: min. 60 mm, finish flush with wall, one side install allowed
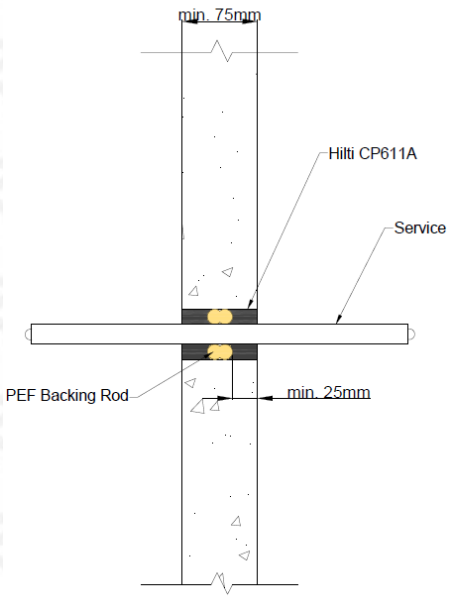	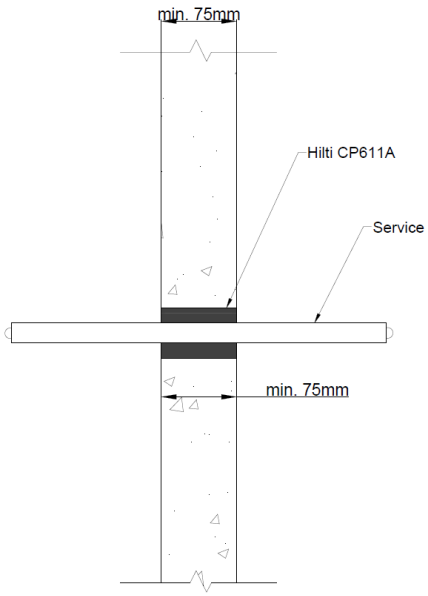	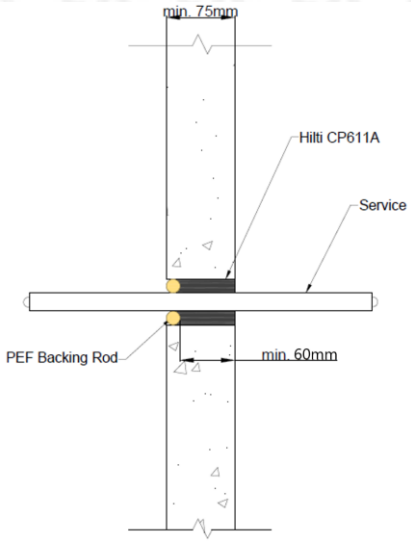
Front view	Front view	Front view
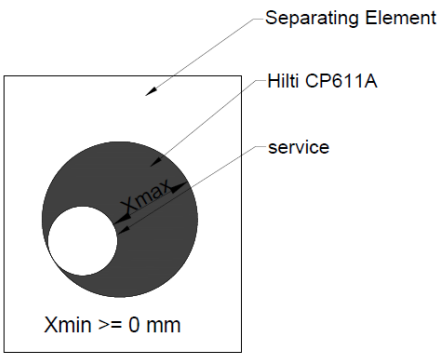	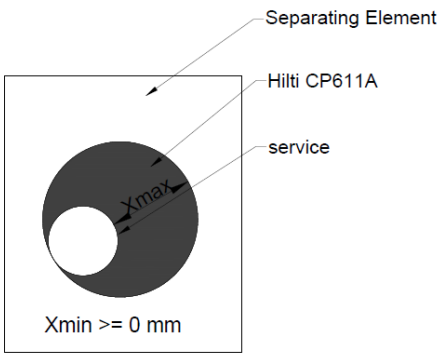	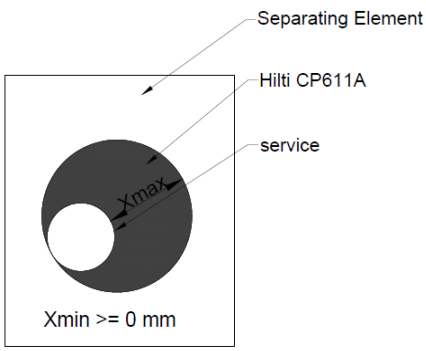

APPENDIX - UL-AU CERTIFICATE

Certificate No. UL-AU-230008
Page 64/97
Date of Issue 2024-10-02

Seal type 5.25	Seal type 5.26	Seal type 5.27
CFS-C P 50/1.5" with CP 611A filled full depth of the collar	Aperture build up needed as per C.1.2 Seal depth: minimum 25 mm depth and finish flush, both sides Coning: 25 x 25 mm	Aperture build up needed as per C.1.2 CFS-C P 50/1.5" with CP 611A filled full depth of the collar
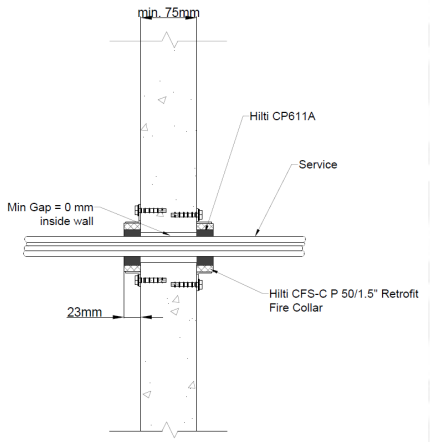	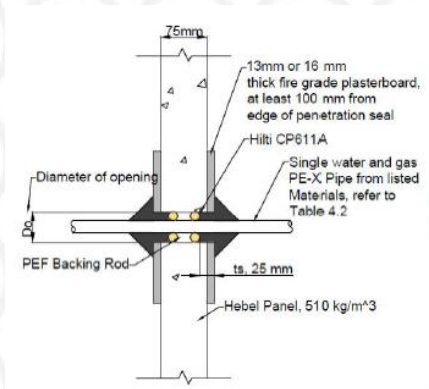	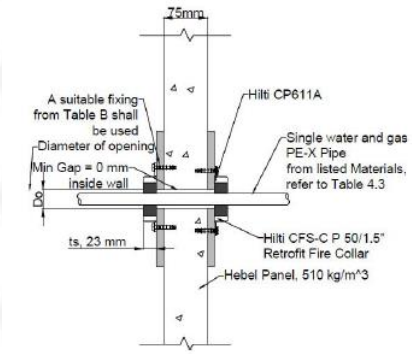
Front view 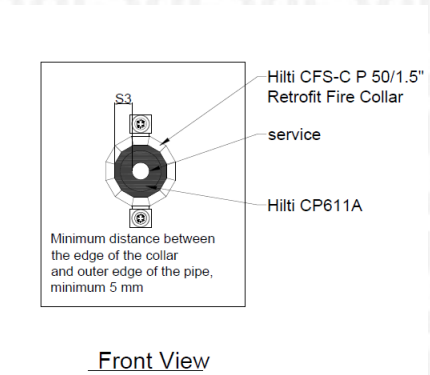	Front view 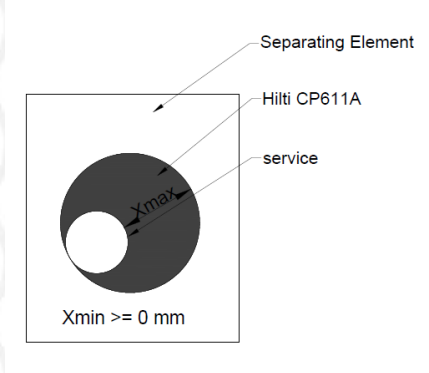	Front view 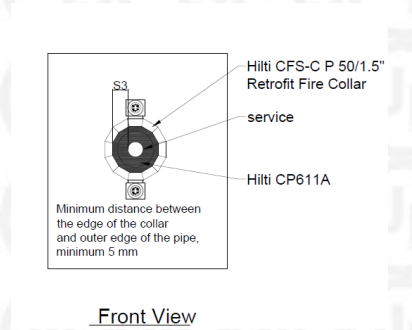

APPENDIX - UL-AU CERTIFICATE

Certificate No. UL-AU-230008
Page 65/97
Date of Issue 2024-10-02

Service	Pipe diameter (mm)	Pipe Wall thickness range (mm)	Minimum Diameter of the opening (mm)	Maximum Diameter of the opening (mm)	FRL Seal type 5.22, 5.23, 5.24,	FRL Seal type 5.26, 5.27
PE-Xa according to AS 2492:2007	16	1.2-2.4	27	38	-/120/120	
	20	2.3-3.4	32	38	-/120/120	
	25	2.8-3.9	35	50	-/120/120	
PE-Xb according to AS 2492:2007	16	1.2-2.4	27	38	-/120/120	
	20	1.9-2.4	32	38	-/120/120	
	25	2.3-3.9	35	50	-/120/120	
PE-X/AL/PE	16	2.0-2.6	27	38	-/120/120	
	20	2.3-2.9	32	38	-/120/120	
	25	3.5-3.7	35	50	-/120/90	-/120/120
PE-Xb/AL/PE-Xb	16	2.0-2.6	27	38	-/120/120	
	20	2.0-2.9	32	38	-/120/120	
	25	2.4-3.7	35	50	-/120/90	-/120/120
PE/AL/PE	16	2.0-2.6	27	38	-/120/120	
	20	2.3-2.9	32	38	-/120/120	
	25	3.5-3.7	35	50	-/120/120	

Service	Pipe diameter (mm)	Pipe Wall thickness range (mm)	Minimum Diameter of the opening (mm)	Maximum Diameter of the opening (mm)	FRL Seal type 5.25
PE-Xa according to AS 2492:2007	16	1.2-2.4	16	25	-/120/120
	20	2.3-3.4	20	32	-/120/120
	25	2.8-3.9	25	38	-/120/120
PE-Xb according to AS 2492:2007	16	1.2-2.4	16	25	-/120/120
	20	1.9-2.4	20	32	-/120/120
	25	2.3-3.9	25	38	-/120/120
PE-X/AL/PE	16	2.0-2.6	16	25	-/120/120
	20	2.3-2.9	20	32	-/120/120
	25	3.5-3.7	25	38	-/120/90
PE-Xb/AL/PE-Xb	16	2.0-2.6	16	25	-/120/120
	20	2.0-2.9	20	32	-/120/120
	25	2.4-3.7	25	38	-/120/90
PE/AL/PE	16	2.0-2.6	16	25	-/120/120
	20	2.3-2.9	20	32	-/120/120
	25	3.5-3.7	25	38	-/120/120

APPENDIX - UL-AU CERTIFICATE

C.5.3 HVAC services

Service description
The section covers FR pair coil and insulated metal pipe, where pipe can be either copper or metal pipe as per specification and insulation shall be Foamed elastomeric insulation as per B.3

Service configuration
Service, single or bundled services achieve the specified FRL as through penetration as well as rough in configurations, including S, C, L configurations as per C.1.5

Service variation allowed
Single insulated copper pipe also covered when pipe size provided copper pipe size 6.35 - 19.05, insulation 13 – 19, install as per respective configuration, with cable and/or condensation pipe

Max two single insulated copper pipe can be put together provided copper pipe size 6.35 - 19.05, insulation 13 – 19 mm install as per respective configuration, without cable and/or condensation pipe

CP 611A sealant installation configurations – Seal types

Seal type 5.28	Seal type 5.29	Seal type 5.30
Backing: backing rod as per B.4 Seal depth: 25 mm both sides of the wall and coning 30 x 30 mm	Backing: backing rod as per B.4 Seal depth: 25 mm both sides of the wall and coning 30 x 30 mm	Backing: backing rod as per B.4 Seal depth: 25 mm both sides of the wall Additional wrapping: 2 layers of CFS-P BA putty bandage
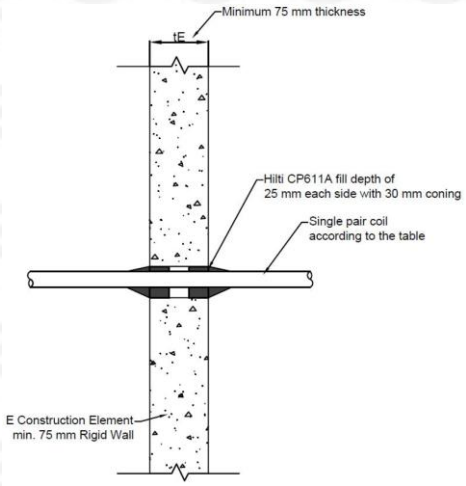	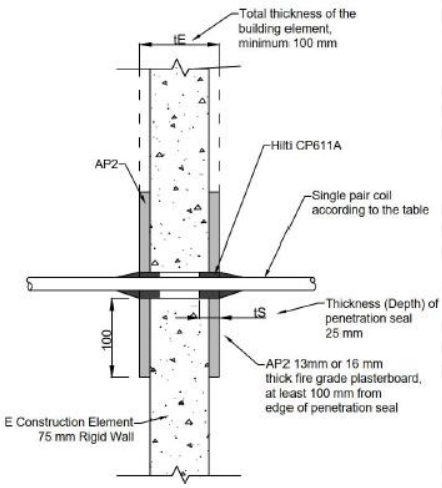	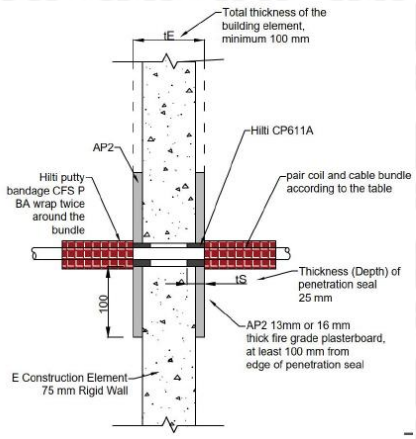

APPENDIX - UL-AU CERTIFICATE

Certificate No. UL-AU-230008
Page 67/97
Date of Issue 2024-10-02

	If the total thickness of the separating wall element as per A.1.5 is greater than 100 mm, local aperture framing is then not needed 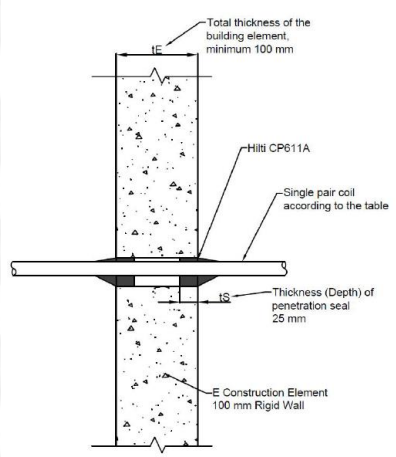	If the total thickness of the separating wall element as per A.1.5 is greater than 100 mm, local aperture framing is then not needed 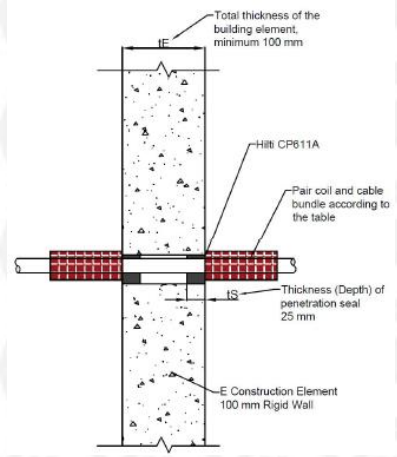
Front view 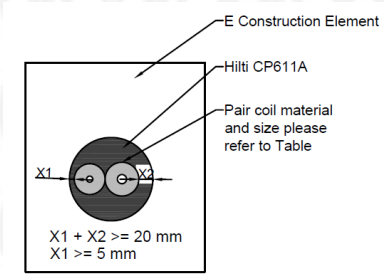 Front View - one core	Front view 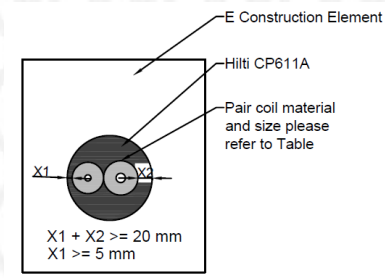 Front View - one core	Front view 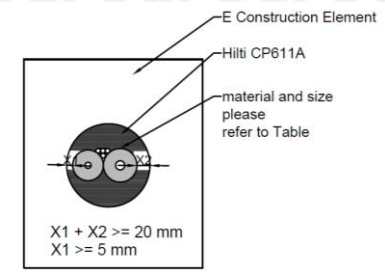 Front View - one core
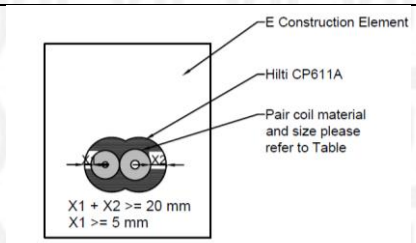 Front View - stitch core	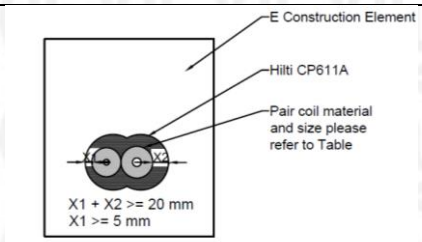 Front View - stitch core	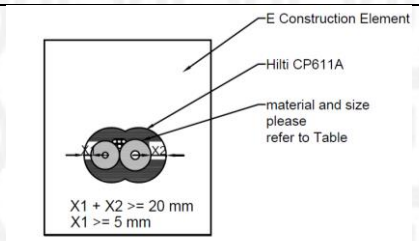 Front View - stitch core
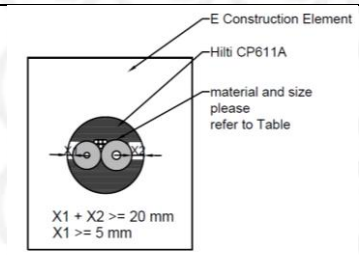 Front View - one core	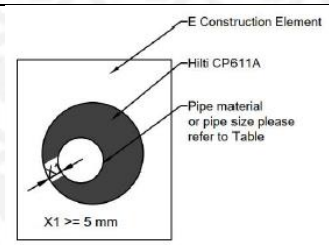 Front View	

Certification Body

UL International New Zealand Limited
54 Tarndale Grove, Albany,
Auckland 0632, New Zealand.
+64 9 415 3355, customerservice.anz@ul.com,
https://au-nz.ul.com

APPENDIX - UL-AU CERTIFICATE

Certificate No. UL-AU-230008
Page 68/97
Date of Issue 2024-10-02

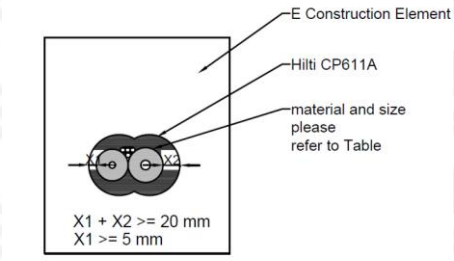 Front View - stitch core		
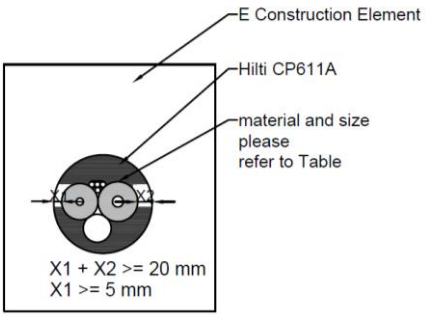 Front View - one core		
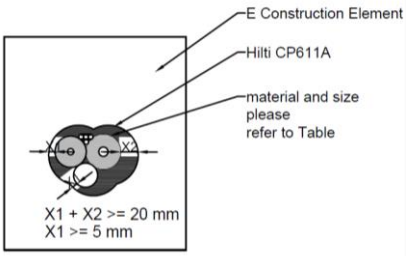 Front View - stitch core		
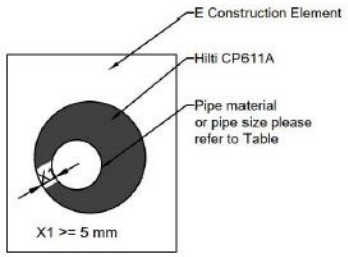 Front View		

Certification Body **UL International New Zealand Limited**
54 Tarndale Grove, Albany,
Auckland 0632, New Zealand.
+64 9 415 3355, customerservice.anz@ul.com,
https://au-nz.ul.com

APPENDIX - UL-AU CERTIFICATE

Certificate No. UL-AU-230008
Page 69/97
Date of Issue 2024-10-02

Seal Type 5.31

CFS-C P 110/4" with CP 611A filled full depth of the collar, 23 mm, and seal depth in wall minimum 24 mm, does not apply to mixed service

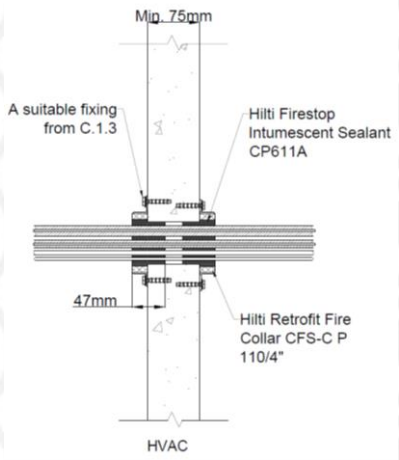

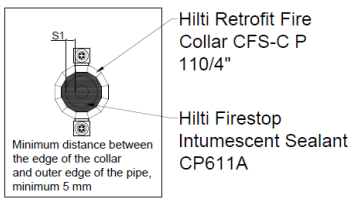

C.5.3.1 HVAC – pair coil configuration

Pair coil tube size		Insulation thickness (mm)	Min aperture size (mm)	Maxi aperture size (mm)	Local fire-stopping protection	FRL - Seal type 5.28	FRL - Seal type 5.29
mm	Inch						
6.35-9.52	1/4-3/8	13 or 19	Penetrant outer diameter + minimum 20 mm, stitch core allowed	125 mm diameter or equivalent area	CP 611a filled to a depth of 25 mm each side and finished with a 30 mm sealant fillet cone – on both the sides.	-/60/60	-/120/120
6.35-12.7	1/4-1/2	13 or 19				-/60/60	-/120/120
6.35-15.88	1/4-5/8	13 or 19				-/60/60	-/120/120
9.5-15.99	3/8-5/8	13 or 19				-/60/60	-/120/120
9.5-19.05	3/8-3/4	13 or 19				-/60/60	-/120/120

APPENDIX - UL-AU CERTIFICATE

C.5.3.2 HVAC – pair coil with cable configuration

Pair coil tube size		Insulation thickness (mm)	Cable type	Min aperture size (mm)	Maxi aperture size (mm)	Local fire-stopping protection	FRL - Seal type 5.28
mm	Inch						
6.35-9.52	1/4-3/8	13 or 19	• 1 × power cable up to 2.5 mm² • 1 x data cable up to 1.0 mm²	Penetrant outer diameter + minimum 20 mm, stitch core allowed	125 mm diameter or equivalent area	CP 611a filled to a depth of 25 mm each side and finished with a 30 mm sealant fillet cone – on both sides.	-/60/60
6.35-12.7	1/4-1/2	13 or 19					-/60/60
6.35-15.88	1/4-5/8	13 or 19					-/60/60
9.5-15.99	3/8-5/8	13 or 19					-/60/60
9.5-19.05	3/8-3/4	13 or 19					-/60/60

C.5.3.3 HVAC – pair coil with cable configuration

Pair coil tube size		Insulation thickness (mm)	Cable type	Min aperture size (mm)	Maxi aperture size (mm)	Local fire-stopping protection	Additional Protection	FRL - Seal type 5.30
mm	Inch							
6.35-9.52	1/4-3/8	13 or 19	• 1 × power cable up to 2.5 mm² • 1 x data cable up to 1.0 mm²	Penetrant outer diameter + minimum 20 mm, stitch core allowed	125 mm diameter or equivalent area	CP 611a filled to a depth of 25 mm each side and finished flush.	Two layers of 100 mm wide CFS-P BA putty bandage installed on both sides.	-/120/120
6.35-12.7	1/4-1/2	13 or 19						-/120/120
6.35-15.88	1/4-5/8	13 or 19						-/120/120
9.5-15.99	3/8-5/8	13 or 19						-/120/120
9.5-19.05	3/8-3/4	13 or 19						-/120/120

APPENDIX - UL-AU CERTIFICATE

C.5.3.4 HVAC – pair coil with pipe and cable configuration

Pair coil tube size		Insulation thickness (mm)	Cable type	Condensation pipe type	Min aperture size (mm)	Maxi aperture size (mm)	Local fire-stopping protection	FRL - Seal type 5.28
mm	Inch							
6.35-9.52	1/4-3/8	13 or 19	• 1 × power cable up to 2.5 mm² • 1 x data cable up to 1.0 mm²	1 × up to 25 mm uPVC condensation pipe rigid or flexible	Penetrant outer diameter + minimum 20 mm, stitch core allowed	125 mm diameter or equivalent area	CP 611a filled to a depth of 25 mm each side and finished with a 30 mm sealant fillet cone – on both sides.	-/60/60
6.35-12.7	1/4-1/2	13 or 19						-/60/60
6.35-15.88	1/4-5/8	13 or 19						-/60/60
9.5-15.99	3/8-5/8	13 or 19						-/60/60
9.5-19.05	3/8-3/4	13 or 19						-/60/60

Service bundle	Max Number of service in the bundle	Min. opening dia. (mm)	Max. opening dia. (mm)	Hilti Retrofit Firestop Collar CFS-C P size and sealant	Depth of Sealant, t_s	FRL - Seal type 5.31
Up to 3/8” Copper pipe, 19mm insulated*	1	90	127	CFS-C P 110/4” & CP611a	47 (25 m into base material + depth of collar)	-/120/120
Up to 1/2” Copper pipe, 19mm insulated* OR up to 5/8” Copper pipe, 25mm insulated*	1					
20 - 25mm uPVC condensation pipe	1					
1-4mm² 2C+E TPS Cables	3					

*Copper pipes insulated with Nitrile rubber insulation (Armaflex/K-Flex)

APPENDIX - UL-AU CERTIFICATE

C.5.3.5 HVAC – condensation pipe configuration					
Pipe type	Pipe outer diameter (mm)	Aperture size (mm)	Local fire-stopping protection	FRL - Seal type 5.28	FRL - Seal type 5.29
1 x 25 mm uPVC condensation pipe	Up to 33 mm	48 - 54	CP 611a filled to a depth of 25 mm each side and finished with a 30 mm sealant fillet cone – on both the exposed and unexposed sides.	-/60/60	-/120/120
1 x 25 mm uPVC corrugated conduit	Up to 25 mm	38 - 46		-/60/60	-/120/120

APPENDIX - UL-AU CERTIFICATE

C.6 Proprietary walls And Rigid walls tE ≥ 150 mm, wall type A.1.6

For detailed specifications of products covered, refers to section A.1

For detailed specifications of separating base material covered, refers to section A.1.1 - A.1.7

For detailed specifications of additional protections for metal pipe/insulated metal pipe to achieve better insulation rating, refers to B.2, B.3

For detailed specifications of backing material, refers to section B.1, B.4

For detailed specifications of backing rod size selection, refers to section C.1.5

For detailed specifications of fixings required into separating base material, refers to section C.1.3

For detailed specifications of rough in configurations, refers to section C.1.5

For detailed specifications of Aperture framing to locally build up the separating base material to required thickness, refers to section B.1.2

Opening size

Maximum seal size is 150 x 150 mm or openings of any shape of equivalent area, subject to the application

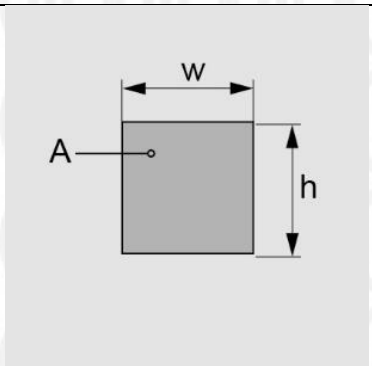

Annular gap between service and opening

Details on annular gap between service and base material specified in the solution table, as Xmin and Xmax

Minimum clear distance between individual opening shall be 40 mm

- When collar is used, the clear distance should be adjusted from edge of the collar casing
- When coning is needed, spacing must be adjusted so that the full coning can be achieved

Mixed services

Mixed services within the same opening applies to approved applications in this section C.6, unless specified not covered in mixed service

APPENDIX - UL-AU CERTIFICATE

Certificate No. UL-AU-230008
Page 74/97
Date of Issue 2024-10-02

Mixed services in one opening - clear distance between services

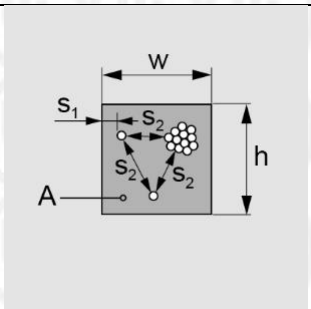

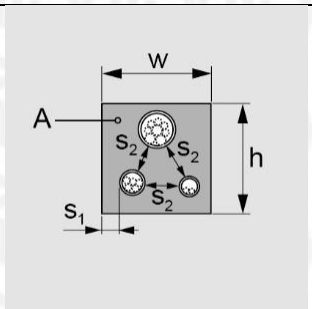

Minimum distances between services (mm):

Minimum distance valid for installation services	Wall (mm)	
Distance between pipe and seal edge	s_1 =	5
Distance between pipe and seal edge (only where specifically allowed in section C.6	S_1 =	0
Clear distance between penetrations	s_2 =	40
Distance between pipe and Hilti CFS-C P 50/1.5” Retrofit fire collar	s_1 =	5
Distance between cable and seal edge	s_3 =	10

APPENDIX - UL-AU CERTIFICATE

Certificate No. UL-AU-230008
Page 75/97
Date of Issue 2024-10-02

C.6.1 Electrical services

Cables and conduits ≤ 16 mm		**Conduits 16 ≤ Ø ≤ 32 mm**
Seal type 6.3	**Seal type 6.4** (LA ≥ 50 mm, t2A ≥ 10 mm) **Seal type 6.5** (LA ≥ 100 mm, t2A ≥ 10 mm)	**Seal type 6.6**
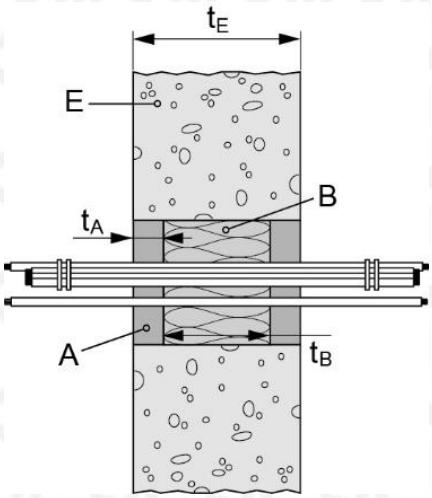	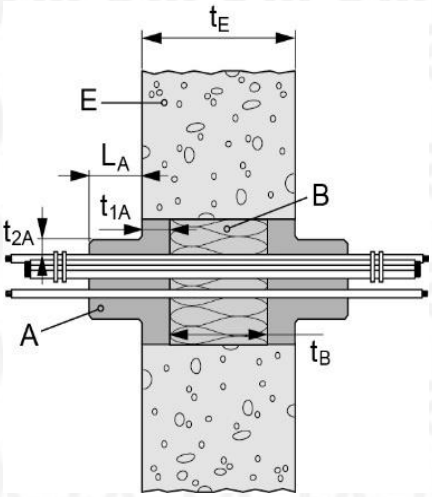	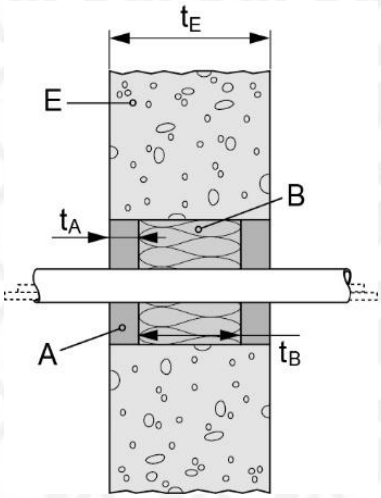
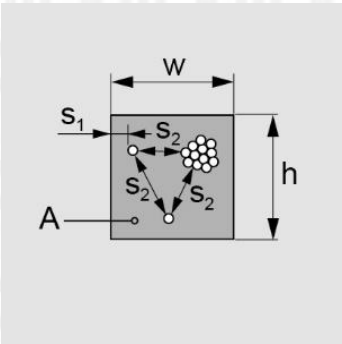		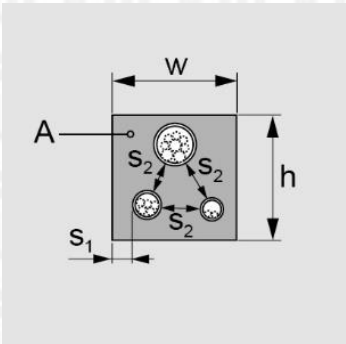

Certification Body **UL International New Zealand Limited**
54 Tarndale Grove, Albany,
Auckland 0632, New Zealand.
+64 9 415 3355, customerservice.anz@ul.com,
https://au-nz.ul.com

APPENDIX - UL-AU CERTIFICATE

C.6.1.1 Single and bundled cable, conduit		
All sheathed cable types currently and commonly used in building practice (e.g. power, control, signal, telecommunication, data, optical fibre cables) with a diameter of:	**FRL (Fire Resistance Level)**	
	Seal type 6.3	**Seal type 6.4**
	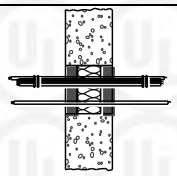	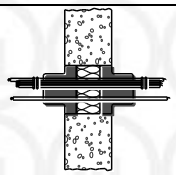
Maximum Ø 21 mm, single cable	-/120/120	-/120/120
21 ≤ Ø ≤ 80 mm, single cable	-/120/60	-/120/120
Tied cable bundle[1], maximum diameter of 100 mm, maximum diameter of single cable 21 mm	-/120/90	-/120/120

Single cable penetration The opening has maximum dimensions Ø100 mm. The wall must comprise concrete, aerated concrete or masonry, with a minimum density of 650 kg/m^3	
Service	**Seal type 6.3**
All sheathed cable types currently and commonly used in building practice (e.g. power (including copper or AL core), control, signal, telecommunication, data, optical fibre cables) with a diameter of maximum Ø 13.8 mm	-/180/180

Conduits (Seal type 6.6)	
Small steel conduits and tubes, diameter ≤ 16 mm, arranged linear, with or without cables	-/120/120
Small plastic conduits and tubes, diameter ≤ 16 mm, arranged linear, with or without cables	-/120/120
Plastic conduits, diameter 16 ≤ Ø ≤ 32 mm, wall thickness 1 - 3 mm, arranged linear or in a cluster, with or without cables	-/120/120

[1] Several cables running in the same direction and bound closely together by mechanical means

APPENDIX - UL-AU CERTIFICATE

Certificate No. UL-AU-230008
Page 77/97
Date of Issue 2024-10-02

C.6.2 Plumbing and Sprinkler services

Pipes 32 ≤ Ø ≤ 50 mm

Seal type 6.7

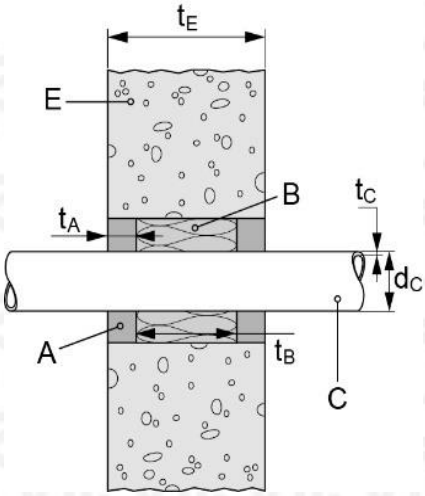

Front View

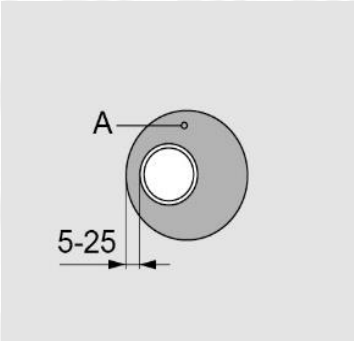

C.6.2.1 Single pipe penetrations (seal type 6.7)

The opening has maximum dimensions Ø100 mm. The wall must comprise concrete, aerated concrete or masonry, with a minimum density of 650 kg/m³. The width of the annular gap is between 5 and 25 mm

PVC pipes as per AS 1260 OR PVC pipe follow pipe specification in the table

Pipe		**FRL (Fire Resistance Level) Seal type 6.7**
diameter (d_C) [mm]	wall thickness (t_C) [mm]	
≥ 32 - 50	1.8 / 2.2 – 6.4	-/180/180*

*Pipe FRL are pipe end configuration U/U (U= Uncapped, U=Uncapped)

Certification Body **UL International New Zealand Limited**
54 Tarndale Grove, Albany,
Auckland 0632, New Zealand.
+64 9 415 3355, customerservice.anz@ul.com,
https://au-nz.ul.com

APPENDIX - UL-AU CERTIFICATE

C.7 Rigid floor constructions tE ≥ 150 mm, Floor type A.1.7

For detailed specifications of products covered, refers to section A.1

For detailed specifications of separating base material covered, refers to section A.1.1 - A.1.7

For detailed specifications of additional protections for metal pipe/insulated metal pipe to achieve better insulation rating, refers to B.2, B.3

For detailed specifications of backing material, refers to section B.1, B.4

For detailed specifications of backing rod size selection, refers to section C.1.5

For detailed specifications of fixings required into separating base material, refers to section C.1.3

For detailed specifications of rough in configurations, refers to section C.1.5

For detailed specifications of Aperture framing to locally build up the separating base material to required thickness, refers to section B.1.2

Opening size
Maximum seal size is 150 x 150 mm or openings of any shape of equivalent area, subject to the application

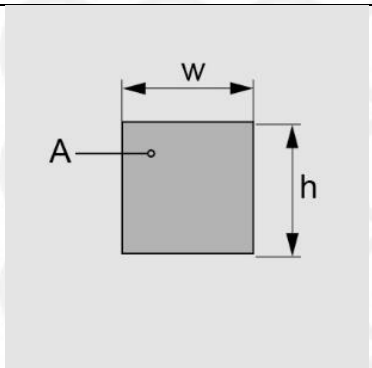

Annular gap between service and opening
Details on annular gap between service and base material specified in the solution table, as Xmin and Xmax.

APPENDIX - UL-AU CERTIFICATE

Mixed services

Mixed services within the same opening applies to approved applications in this section C.7, unless specified not covered in mixed service

Mixed services in one opening - clear distance between services

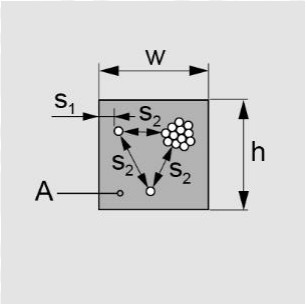

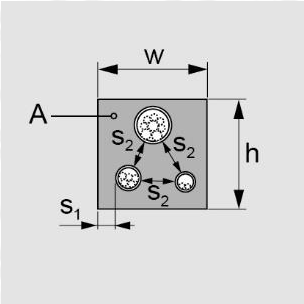

Minimum distances between services (mm):

Cables to edge of seal	s_1 =	0
Cable to other cables / small conduits	s_2 =	0
Tied cable bundle to seal edge	s_1 =	10
Tied cable bundle to other small conduits	s_2 =	0
Conduits Ø ≤ 16 mm to edge of seal	s_1 =	20
Conduits Ø ≤ 16 mm to other conduits Ø ≤ 16 mm	s_2 =	0
Conduits 16 ≤ Ø ≤ 32 mm to edge of seal	s_1 =	10
Conduit bundle to other conduit bundle (conduits from 16 to 32 mm)	s_2 =	10

When mixed services through same opening, the FRL shall be derated to -/60/60

APPENDIX - UL-AU CERTIFICATE

C.7.1 Blank Seal

Blank seal

Seal type 7.1 125 mm minimum depth of mineral wool backing material, minimum 25 mm seal depth	**Seal type 7.2** 100 mm minimum depth of mineral wool backing material, minimum 25 mm seal depth on both sides of floor
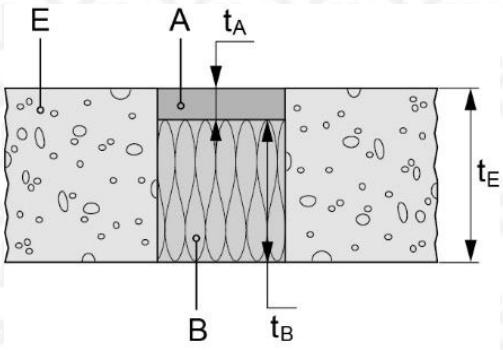	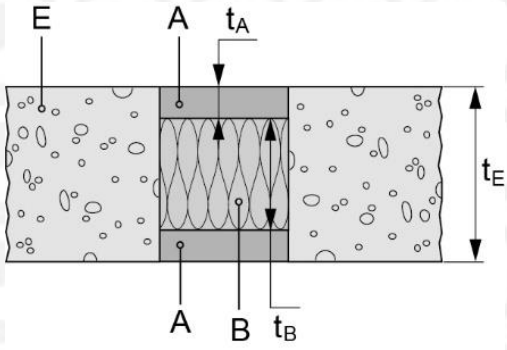

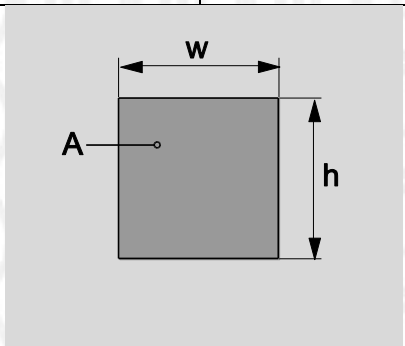

Blank seal, up to 150 x 150 mm or circular openings of equivalent area	**FRL (Fire Resistance Level) - (Seal type 7.1 or 7.2)**
	-/120/120

APPENDIX - UL-AU CERTIFICATE

Certificate No. UL-AU-230008
Page 81/97
Date of Issue 2024-10-02

C.7.2 Electrical services

C.7.2.1 Single and bundled cable

CP 611A sealant installation configurations – Seal types

Seal type 7.3	**Seal type 7.4** (coning LA ≥ 50 mm, t2A ≥ 10 mm) **Seal type 7.5** (coning LA ≥ 100 mm, t2A ≥ 10 mm)
Backing: Required as per B.2, thickness (t_B) ≥ 125 mm (gap filled completely Seal depth: min. 25 mm, top only 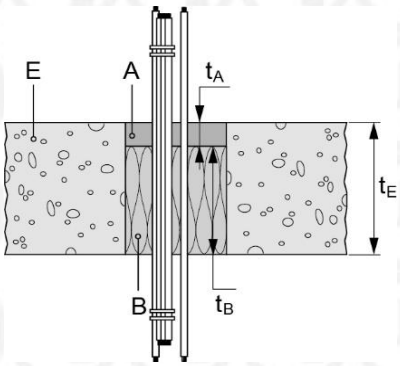 	Backing: Required as per B.2, thickness (t_B) ≥ 125 mm Seal depth: min. 25 mm, top only On top coning: 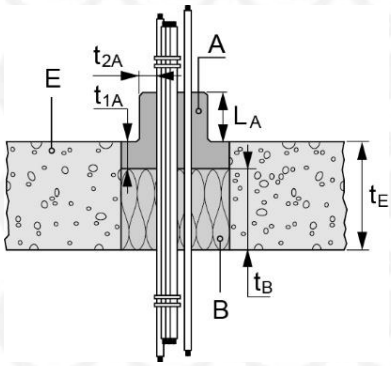

For abbreviations see the related text and Appendix E of the UL-AU.

Cables

All sheathed cable types (e.g. power (copper or AL core), control, signal, telecommunication, data, optical fibre cables) with a diameter of:	**FRL (Fire Resistance Level)**		
	Seal type 7.3	Seal type 7.4	Seal type 7.5
	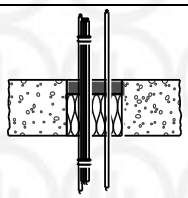	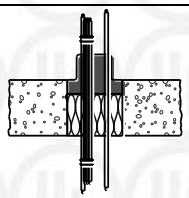	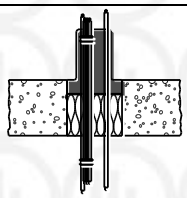
Single cable, maximum Ø 21 mm	-/120/120	-/120/120	-/120/120
Single cable, 21 ≤ Ø ≤ 80 mm	-/120/90	-/120/90	-/120/120
Small cables in bundles ≤20 mm dia. bundle	-/120/120	-/120/120	-/120/120
Tied cable bundle[2], maximum diameter of 100 mm, maximum diameter of single cable 21 mm	-/120/90	-/120/120	-/120/120

[2] Several cables running in the same direction and bound closely together by mechanical means

APPENDIX - UL-AU CERTIFICATE

Certificate No. UL-AU-230008
Page 82/97
Date of Issue 2024-10-02

C.7.2.2 D1 & D2 standard cable configuration

CP 611A sealant installation configurations – Seal types

Seal type 7.3	**Seal type 7.4** (coning LA ≥ 50 mm, t2A ≥ 10 mm) **Seal type 7.5** (coning LA ≥ 100 mm, t2A ≥ 10 mm)
backing: Required as per B.2, thickness (t_B) ≥ 125 mm (gap filled completely Seal depth: min. 25 mm, top only 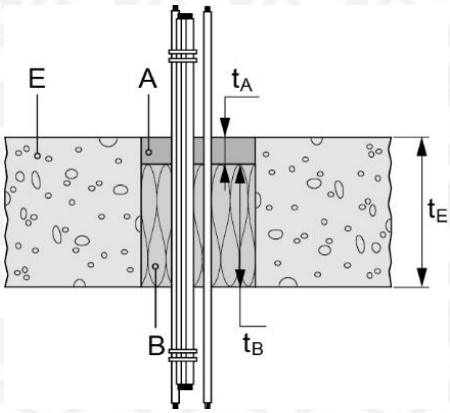 	backing: Required as per B.2, thickness (t_B) ≥ 125 mm Seal depth: min. 25 mm, top only On top coning: **Seal type 7.4** (LA ≥ 50 mm, t2A ≥ 10 mm) **Seal type 7.5** (LA ≥ 100 mm, t2A ≥ 10 mm) 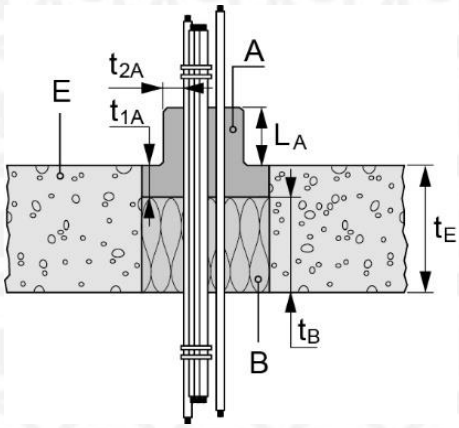

Service (C)	Thickness/Depth of Sealant (Ts, Ts1, mm)	Annular gap	Backing Material	Seal Type	FRL
PVC Insulated Power and communication Cables with or without Cable Tray. (Standard D1 & D2 Cable Set, in accordance with AS 1530.4:2014 Appendix D)	25 mm	min. 10 mm	Required, refer to section B.2	Seal Type 7.3	-/120/90
				Seal Type 7.4, 7.5	-/120/120

When there is no cable tray sustained through the opening, the cables must be rigidly supported within 200mm from the either side of the floor. And the additional sealant requirements is applied around the individual cables/cable bundles on the top sides of the floor. l.

Maximum seal size: 150 x 150 mm or circular openings of equivalent area

Certification Body **UL International New Zealand Limited**
54 Tarndale Grove, Albany,
Auckland 0632, New Zealand.
+64 9 415 3355, customerservice.anz@ul.com,
https://au-nz.ul.com

APPENDIX - UL-AU CERTIFICATE

Certificate No. UL-AU-230008
Page 83/97
Date of Issue 2024-10-02

C.7.2.3 Cable Conduit – plastic or metal

CP 611A sealant installation configurations – Seal types

Seal type 7.6 (LA ≥ 50 mm, t2A ≥ 10 mm) **Seal type 7.7** (LA ≥ 100 mm, t2A ≥ 10 mm)	**Seal type 7.8**
backing: Required as per B.2, thickness (t_B) ≥ 100 mm Seal depth: min. 25 mm, both sides coning, both sides: Seal type 7.7 (LA ≥ 50 mm, t2A ≥ 10 mm) Seal type 7.8 (LA ≥ 100 mm, t2A ≥ 10 mm) 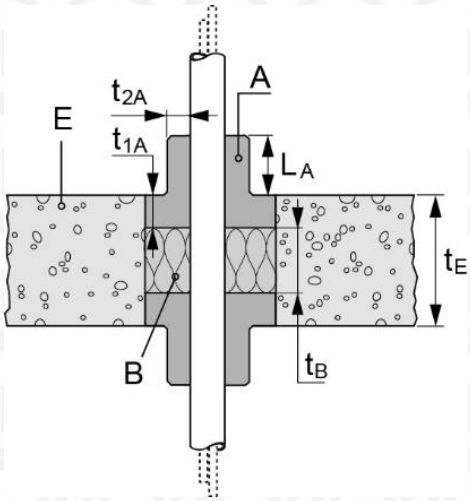 	backing: Required as per B.2, thickness (t_B) ≥ 100 mm Seal depth: min. 25 mm, both sides, finish flush 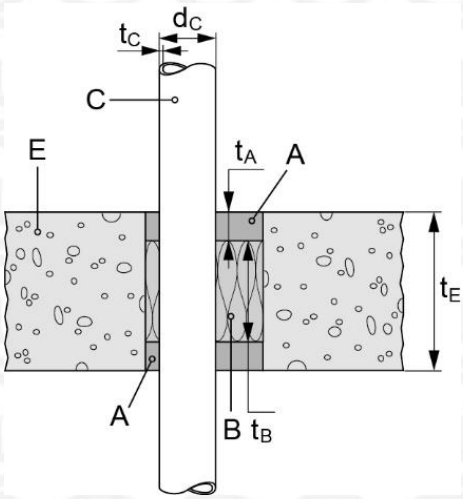
	Front View Annular gap is between 5 and 25 mm 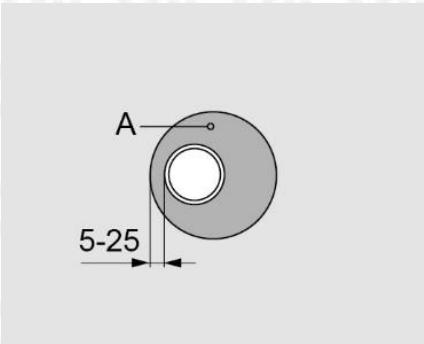

APPENDIX - UL-AU CERTIFICATE

Certificate No. UL-AU-230008
Page 84/97
Date of Issue 2024-10-02

	FRL (Fire Resistance Level)		
	Seal type 7.3	Seal type 7.4	Seal type 7.5
Plastic Conduits	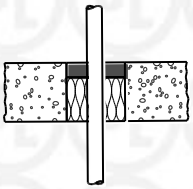	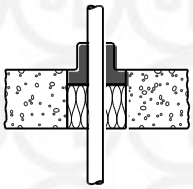	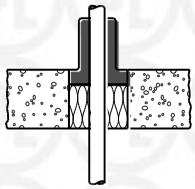
Small steel conduits and tubes, diameter ≤ 16 mm, arranged linear, with or without cables	-/90/90**	-/120/120**	-/120/120**
Small plastic conduits and tubes, diameter ≤ 16 mm, arranged linear, with or without cables	-/90/90*	-/120/120*	-/120/120*

	FRL (Fire Resistance Level)	
	Seal type 7.6	Seal type 7.7
Clustered plastic conduit	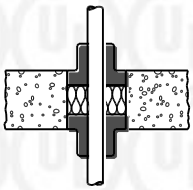	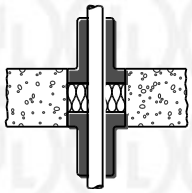
Plastic conduits, diameter 16 ≤ Ø ≤ 32 mm, wall thickness 1 – 3 mm, arranged linear or in a cluster, with or without cables	-/120/120*	-/120/120*

Rigid, flexible and pliable conduit	FRL (Fire Resistance Level) – Seal type 7.8
Rigid, flexible (wave height max 4.5 mm) and pliable PVC conduit up to Ø 40 mm dia., with or without cables, single conduit or conduit bundles up to Ø 80 mm	-/120/120***
Rigid, flexible (wave height max 4.5 mm) and pliable PO conduit up to Ø 40 mm dia., with or without cables, Single conduit or conduit bundles up to Ø 80 mm	-/90/90***

*Pipe FRL are pipe end configuration U/C (U= Uncapped, C=Capped)
**Pipe FRL are pipe end configuration C/U (C=Capped, U= Uncapped)
***Pipe FRL are pipe end configuration U/U (U= Uncapped, U=Uncapped)

Certification Body **UL International New Zealand Limited**
54 Tarndale Grove, Albany,
Auckland 0632, New Zealand.
+64 9 415 3355, customerservice.anz@ul.com,
https://au-nz.ul.com

APPENDIX - UL-AU CERTIFICATE

Certificate No. UL-AU-230008
Page 85/97
Date of Issue 2024-10-02

C.7.3 Plumbing and Sprinkler services

C.7.3.1 PEX and gas PEX

CP 611A sealant installation configurations – Seal types

Seal type 7.8
backing: Required as per B.2, thickness (t_B) ≥ 100 mm
Seal depth: min. 25 mm, both sides, finish flush

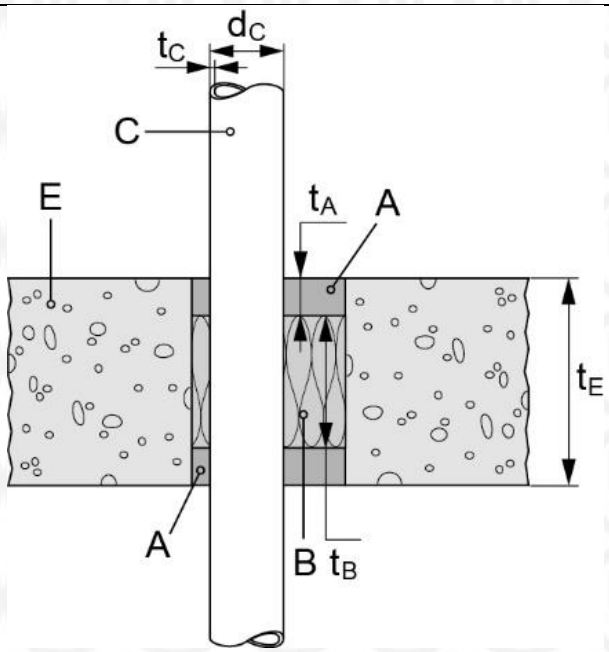

Front View
Annular gap is between 5 and 25 mm

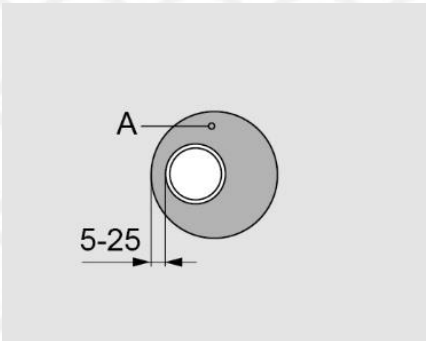

Certification Body **UL International New Zealand Limited**
54 Tarndale Grove, Albany,
Auckland 0632, New Zealand.
+64 9 415 3355, customerservice.anz@ul.com,
https://au-nz.ul.com

APPENDIX - UL-AU CERTIFICATE

Certificate No. UL-AU-230008
Page 86/97
Date of Issue 2024-10-02

PEXa pipes according to AS 2492:2007, not insulated		
Pipe		**FRL (Fire Resistance Level)** – Seal type 7.8
diameter [mm]	wall thickness (t_C) [mm]	
≥ 16 - 32	2.2 - 4.0	-/120/120*

PEXa pipes according to AS 2492:2007, inside PVC corrugated pipe Local Sustained (LS*) or Continued Sustained (CS)				
Pipe		PVC corrugated pipe (t_C) 1 mm		**FRL (Fire Resistance Level)** – Seal type 7.8
diameter (d_C) [mm]	wall thickness (t_C) [mm]	thickness (t_D) [mm]	length (L_D) [mm]	
≥ 16 - 25	2.2 - 3.5	25 - 34	*≥ 250	-/120/120*

PEXa pipes according to AS 2492:2007, inside PVC corrugated pipe Local Sustained (LS*) or Continued Sustained (CS)				
Pipe		PVC corrugated pipe		**FRL (Fire Resistance Level)** – Seal type 7.8
diameter (d_C) [mm]	wall thickness (t_C) [mm]	thickness (t_D) [mm]	length (L_D) [mm]	
≥ 16 - 25	2.2 - 3.5	25 - 34 x 1.0	*≥ 250	-/120/120*

Geberit Mepla, Aluminium composite pipes PE-Xd/Al/PE-HD, not or local insulated with Armaflex AF pipe insulation Local Sustained (LS*) or Continued Sustained (CS)				
Pipe		Insulation		**FRL (Fire Resistance Level)** – Seal type 7.8
diameter (d_C) [mm]	wall thickness (t_C) [mm]	thickness (t_D) [mm]	length (L_D) [mm]	
≥ 16 - 50	2.25 - 4.0	-	-	-/120/120*
≥ 16 - 50	2.25 - 4.0	8 - 21	*250	-/120/120*

Aluminium composite pipes PE-XB/Al/PE-XB (EN ISO 21003), without insulation or local insulated with Armaflex AF pipe insulation Local Sustained (LS*) or Continued Sustained (CS)				
Pipe		Insulation		**FRL (Fire Resistance Level)** – Seal type 7.8
diameter (d_C) [mm]	wall thickness (t_C) [mm]	thickness (t_D) [mm]	length (L_D) [mm]	
≥ 16 - 50	2.0 - 4.0	-	-	-/120/120*
≥ 16 - 50	2.0 - 4.0	8 - 21	*≥ 250	-/120/120*

*Pipe FRL are pipe end configuration U/C (U= Uncapped, C=Capped)

Certification Body **UL International New Zealand Limited**
54 Tarndale Grove, Albany,
Auckland 0632, New Zealand.
+64 9 415 3355, customerservice.anz@ul.com,
https://au-nz.ul.com

APPENDIX - UL-AU CERTIFICATE

Certificate No. UL-AU-230008
Page 87/97
Date of Issue 2024-10-02

Aluminium composite pipes PE-RT/Al/PE-RT, without insulation or local insulated with Armaflex AF pipe insulation Local Sustained (LS*) or Continued Sustained (CS)				
Pipe		Insulation		**FRL (Fire Resistance Level)** – Seal type 7.8
diameter (d_C) [mm]	wall thickness (t_C) [mm]	thickness (t_D) [mm]	length (L_D) [mm]	
≥ 16 - 40	2.0 - 3.5	-	-	-/120/120*
≥ 16 - 40	2.0 - 3.5	8 - 21	*≥ 250	-/120/120*
Aluminium composite pipes PE-RT/Al/PE-RT, inside PVC corrugated pipe Local Sustained (LS*) or Continued Sustained (CS)				
Pipe		PVC corrugated pipe (t_C) 1 mm		**FRL (Fire Resistance Level)** – Seal type 7.8
diameter (d_C) [mm]	wall thickness (t_C) [mm]	thickness (t_D) [mm]	length (L_D) [mm]	
≥ 16 - 32	2.0 - 4.0	25 - 44	*≥ 250	-/120/120*

Aluminium composite pipes PE-RT/Al/PE-RT, without insulation or local insulated with Armaflex AF pipe insulation Local Sustained (LS*) or Continued Sustained (CS)				
Pipe		Insulation		**FRL (Fire Resistance Level)** – Seal type 7.8
diameter (d_C) [mm]	wall thickness (t_C) [mm]	thickness (t_D) [mm]	length (L_D) [mm]	
≥ 16 - 32	2.0 - 3.5	-	-	-/120/120*
≥ 16 - 32	2.0 - 3.5	8 - 19,5	*≥ 250	-/120/120*

*Pipe FRL are pipe end configuration U/C (U= Uncapped, C=Capped)

APPENDIX - UL-AU CERTIFICATE

C.7.3.2 UPVC and proprietary pipe		
PVC pipes according AS 1260, not insulated		
Pipe		**FRL (Fire Resistance Level)** – Seal type 7.8
diameter (d_C) [mm]	wall thickness (t_C) [mm]	
≥ 16 - 20	1.8 – 2.3	-/120/120**
32	1.8 – 3.6	-/120/60**
≥ 32 - 40	2.0 – 3.0	-/120/60**
≥ 40 - 50	1.8 – 3.7	-/120/120*

Geberit Silent, PP pipes PP-C/PP-MD/PP-C, not insulated		
Pipe		**FRL (Fire Resistance Level)** – Seal type 7.8
diameter (d_C) [mm]	wall thickness (t_C) [mm]	
≥ 32 - 40	2	-/120/120**
50	2	-/120/120*

PP Life Master 3, PP pipes PP-CO/PP-MV/PP-CO, not insulated		
Pipe		**FRL (Fire Resistance Level)** – Seal type 7.8
diameter (d_C) [mm]	wall thickness (t_C) [mm]	
≥ 32 - 40	1.8	-/90/90**
50	1.8	-/120/120**

*Pipe FRL are pipe end configuration U/C (U= Uncapped, C=Capped)
**Pipe FRL are pipe end configuration U/U (U= Uncapped, U=Uncapped)

APPENDIX - UL-AU CERTIFICATE

C.7.4 HVAC services

CP 611A sealant installation configurations – Seal types

Single pipes with continuous sustained (CS) insulation	**Single pipes with local sustained (LS) insulation**
Seal type 7.9	**Seal type 7.10**
backing: Required as per B.2, thickness (t_B) ≥ 100 mm Seal depth: min. 25 mm, both sides, finish flush	backing: Required as per B.2, thickness (t_B) ≥ 100 mm Seal depth: min. 25 mm, both sides, finish flush
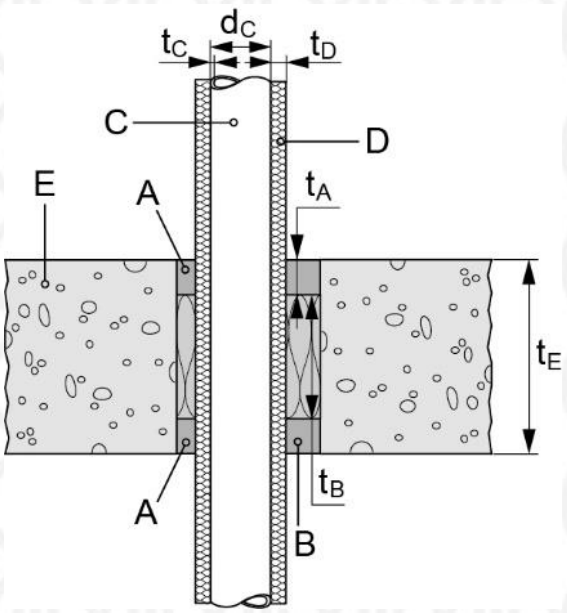	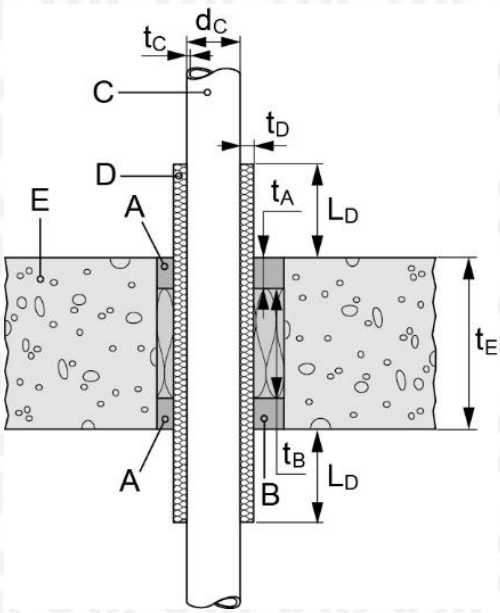
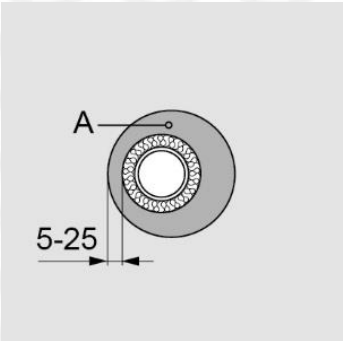	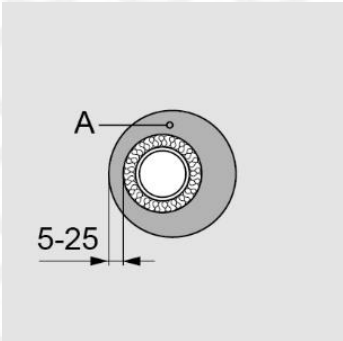

APPENDIX - UL-AU CERTIFICATE

Certificate No. UL-AU-230008
Page 90/97
Date of Issue 2024-10-02

Copper/steel pipes, locally insulated with mineral wool insulation as per B.2 Local Sustained (LS*) or Continued Sustained (CS)				
Pipe		Insulation		**FRL (Fire Resistance Level)**
diameter (d_C) [mm]	wall thickness (t_C) [mm]	thickness (t_D) [mm]	length (L_D) [mm]	
≥ 10 - 42	1.0 / 1.2 - 14.2	20	*≥ 700	-/120/120*
≥ 42 - 89	1.2 / 2.0 - 14.2	40	*≥ 925	-/120/120*

Copper/steel pipes, continuously insulated with Armaflex AF pipe insulation				
Pipe		Insulation		**FRL (Fire Resistance Level)**
diameter (d_C) [mm]	wall thickness (t_C) [mm]	thickness (t_D) [mm]	length (L_D) [mm]	
≥ 10 - 42	1.0 / 1.2 - 14.2	7.5 - 20.5	Continued Sustained (CS)	-/120/120*
≥ 42 - 89	1.2 / 2.0 - 14.2	14.5 - 22.5	Continued Sustained (CS)	-/120/60*

*Pipe FRL are pipe end configuration C/U (C=Capped, U= Uncapped)

APPENDIX - UL-AU CERTIFICATE

D.1 CP 611A use in cast in conduit in slab

D.1.1 CAST IN CONDUIT for pipe

The following configuration specifically refers to cast in conduit in concrete slab construction to run pipe services in the embedded conduit in slab, for penetrations, please refer to Section C

CP 611A sealant installation configurations – Seal types

Backing: optional
Seal depth: min. Hilti CP611A on both sides, 20mm minimum depth, both sides
Coning 10mm × 10mm triangular fillet, both sides.

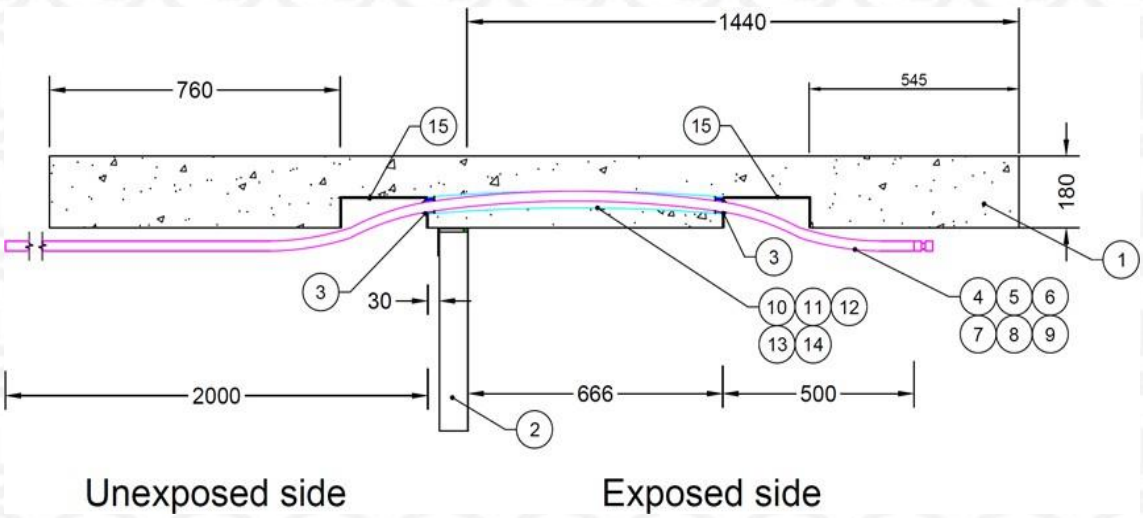

Front View
Annular gap is between 0 and 25 mm

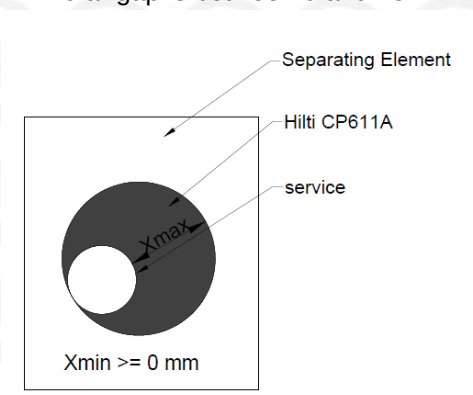

Certification Body **UL International New Zealand Limited**
54 Tarndale Grove, Albany,
Auckland 0632, New Zealand.
+64 9 415 3355, customerservice.anz@ul.com,
https://au-nz.ul.com

APPENDIX - UL-AU CERTIFICATE

Certificate No. UL-AU-230008
Page 92/97
Date of Issue 2024-10-02

Pipe type	Pipe size (mm)	Encapsulation	Cast in electrical box	Sealant in annular gaps	Separating Wall	FRL
PEXa according to AS 2492: 2007, or PE-Xa/AL/PE	16	24mm corrugated PE conduit or 32mm uPVC MD rigid conduit	Maximum 4 pipes in electrical box of 235mm × 155mm × 75mm deep.	Hilti CP611A on both sides, 20mm minimum depth finished with 10mm × 10mm triangular fillet,	Any wall system with 75mm minimum thickness and FRL of -/120/120 or 120/120/120	Up to -/120/120
	20	28mm corrugated PE conduit or 32mm uPVC MD rigid conduit				
	25	42mm corrugated PE conduit or 40mm uPVC MD rigid conduit				

1. Recessed device which creates entry and exist point can be as any shape, as long as the exposure area is less than 225 mm × 225 mm or equivalent and the depth of the device in concrete is less than 75 mm deep
2. Recessed device cast in the concrete slab for service pipes entry and exit may be installed at distances as close as 30 mm to the separating wall, provided the entry and exit boxes are at least 771 mm apart.
3. Any number of recessed devices can be grouped side by side, as long as the exposure area is less than 450 mm × 225 mm or equivalent. Additional box shall be spaced at least laterally 100 mm apart.
4. Fire exposure may be either from below concrete slab or above (with embedded pipes traversing over or under the wall system).
5. Service pipes may be cast in concrete encapsulated in with either uPVC MD or Rehau gas protect conduit
6. Concrete slab thickness shall be 180 mm or thicker.

APPENDIX - UL-AU CERTIFICATE

APPENDIX E - ABBREVIATIONS USED IN DRAWINGS

Abbreviation	Description drawings
A	Hilti Firestop Intumescent Sealant CFS-IS
B	Backfilling material mineral wool
E	Building element (wall, floor)
C	Services
D	Pipe Insulation
h	Height/length of penetration seal
L_A	Length of additional “Hilti Firestop Intumescent Sealant CFS-IS” in front of the wall/floor
s_1, s_2	Distances
t_A, t_{1A}	Thickness (depth) of penetration seal
t_{2A}	Thickness of additional “Hilti Firestop Intumescent Sealant CFS-IS” in front of the wall/floor
t_B	Thickness (depth) of backfilling material
t_E	Thickness of the building element
w	Width of penetration seal
d_C	Pipe diameter (nominal outside diameter) for pipes
t_C	Pipe wall thickness
L_D	Length of insulation
t_D	thickness of insulation

APPENDIX - UL-AU CERTIFICATE

Certificate No. UL-AU-230008
Page 94/97
Date of Issue 2024-10-02

APPENDIX F - INSTALLATION OF THE PRODUCT

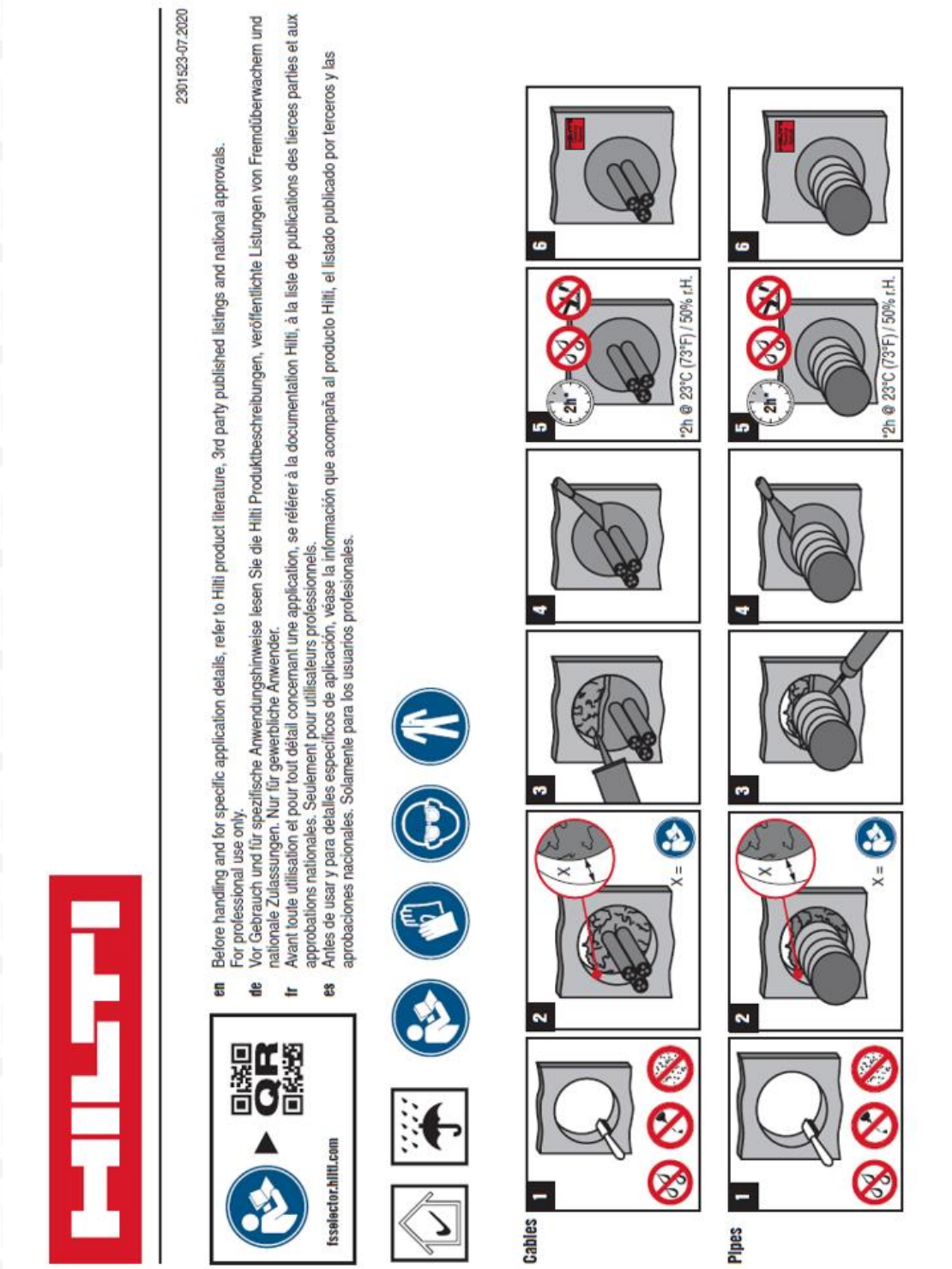

Certification Body **UL International New Zealand Limited**
54 Tarndale Grove, Albany,
Auckland 0632, New Zealand.
+64 9 415 3355, customerservice.anz@ul.com,
https://au-nz.ul.com

APPENDIX - UL-AU CERTIFICATE

Certificate No. UL-AU-230008
Page 95/97
Date of Issue 2024-10-02

APPENDIX G

Test report details – report reference.

Name of Test Institute	Owner	Number of Report	Date of Test	Test standard
WFRGENT nv	**HILTI AG** Feldkircher Str. 100 LI-9494 Schaan	14247A date 19.11.2010	05.05.2010	EN 1366-3: 2009
WFRGENT nv	**HILTI AG** Feldkircher Str. 100 LI-9494 Schaan	14244A date 06.12.2010	11.05.2010	EN 1366-3: 2009
PAVUS, a.s.	**HILTI AG** Feldkircher Str. 100 LI-9494 Schaan	No. Pr-15-2.012-En date 29.02.2016	16.12.2015	EN 1366-3: 2009
WFRGENT nv	**HILTI AG** Feldkircher Str. 100 LI-9494 Schaan	17595C date 17.03.2016	01.02.2016	EN 1366-3: 2009
WFRGENT nv	**HILTI AG** Feldkircher Str. 100 LI-9494 Schaan	18271A date 26.07.2017	29.03.2017	EN 1366-3: 2009
WFRGENT nv	**HILTI AG** Feldkircher Str. 100 LI-9494 Schaan	18272A date 15.07.2017	30.03.2017	EN 1366-3: 2009
AFITI LICOF Centre for Fire Testing and Research	**HILTI AG** Feldkircher Str. 100 LI-9494 Schaan	0791T06, date 17.10.2006	09.05.2006	UNE EN 1366-3: 2005
BRANZ Limited	**Hilti (New Zealand) Limited** Unit B, 750 Great South Road, Penrose Auckland New Zealand	FR 3317 date 20.12.2004	18/06/2004	AS1530.4-1997
Warringtonfire Australia Pty Ltd	**HILTI (Aust.) Pty Ltd** 1G Homebush Bay Drive Rhodes NSW 2138 Australia	2626600.4, date 30.01.2012	21.10.2011	AS1530.4-2014
Warringtonfire Australia Pty Ltd	**HILTI (Aust.) Pty Ltd** 1G Homebush Bay Drive Rhodes NSW 2138 Australia	EWFA 53366600.2 date 24.08.2018	28.03.2018	AS1530.4-2014
Warringtonfire Australia Pty Ltd	**HILTI (Aust.) Pty Ltd** 1G Homebush Bay Drive Rhodes NSW 2138 Australia	FRT 180049.4 date 15.01.2019	09.10.2019	AS1530.4-2014
Warringtonfire Australia Pty Ltd	**HILTI (Aust.) Pty Ltd** 1G Homebush Bay Drive Rhodes NSW 2138 Australia	FRT 180051.2 date 12.03.2019	10.10.2018	AS1530.4-2014

APPENDIX - UL-AU CERTIFICATE

Certificate No. UL-AU-230008
Page 96/97
Date of Issue 2024-10-02

Name of Test Institute	Owner	Number of Report	Date of Test	Test standard
Warringtonfire Australia Pty Ltd	**HILTI (Aust.) Pty Ltd** 1G Homebush Bay Drive Rhodes NSW 2138 Australia	FR180052.2, date 22.01.2019	11.10.2018	AS1530.4-2014
Warringtonfire Australia Pty Ltd	**HILTI (Aust.) Pty Ltd** P.O. Box 3217 Rhodes NSW 2138 Australia	FRT190130 R2.0 date 31.07.2019	11.07.2019	AS1530.4-2014
EFECTIS France	**HILTI AG** Feldkircher Str. 100 LI-9494 Schaan	08-E-079-F date 11.08.2008	13.03.2008	prEN 1366-3: 2006
EFECTIS France	**HILTI AG** Feldkircher Str. 100 LI-9494 Schaan	07-E-317 date 10.04.2008	11.10.2007	prEN 1366-3: 2006
AFITI LICOF Centre for Fire Testing and Research	**HILTI AG** Feldkircher Str. 100 LI-9494 Schaan	Nr 8717/12 date 03.08.2012	09.05.2012	EN 1366-3: 2009
AFITI LICOF Centre for Fire Testing and Research	**HILTI AG** Feldkircher Str.100 LI-9494 Schaan	Nr 8688/12 date 29.10.2012	19.04.2012	EN 1366-3: 2009
Warringtonfire Australia Pty Ltd	**HILTI (Aust.) Pty Ltd** 203-205 Normanby Road South Melbourne VIC 32054 Australia	FRT 190246.2 date 28.01.2020	11.11.2019	AS1530.4-2014
Warringtonfire Australia Pty Ltd	**HILTI (Aust.) Pty Ltd** P.O. Box 3217 Rhodes NSW 2138 Australia	FRT210149 R1.1 date 09.08.2021	18.06.2021	AS1530.4-2014
Warringtonfire Australia Pty Ltd	**HILTI (Aust.) Pty Ltd** P.O. Box 3217 Rhodes NSW 2138 Australia	FRT200338 R1.1 date 09.03.2021	25.11.2020	AS1530.4-2014
Warringtonfire Australia Pty Ltd	**HILTI (Aust.) Pty Ltd** P.O. Box 3217 Rhodes NSW 2138 Australia	FRT 190129 R2.0 date 05.08.2019	10.07.2019	AS1530.4-2014
Warringtonfire Australia Pty Ltd	**HILTI (Aust.) Pty Ltd** P.O. Box 3217 Rhodes NSW 2138 Australia	FRT 240028 R1.0 date 30.08.2024	25.07.2024	AS1530.4-2014
Warringtonfire Australia Pty Ltd	**HILTI (Aust.) Pty Ltd** 1G Homebush Bay Drive Rhodes NSW 2138 Australia	EWFA 53391100.3 date 28.05.2018	28.03.2018	AS1530.4-2014

APPENDIX - UL-AU CERTIFICATE

Certificate No. UL-AU-230008
Page 97/97
Date of Issue 2024-10-02

Name of Test Institute	Owner	Number of Report	Date of Test	Test standard
UL International Germany GmbH	Hilti (Australia) Pty Ltd 1G Homebush Bay Drive PO Box 3217 Rhodes NSW 2138	4790132642-01 date 29.06.2023	29.09.2022	AS1530.4-2014
Warringtonfire Australia Pty Ltd	**HILTI (Aust.) Pty Ltd** P.O. Box 3217 Rhodes NSW 2138 Australia	27912900 RIR 1.6 date 25.02.2020	n/a	n/a
Warringtonfire Australia Pty Ltd	**HILTI (Aust.) Pty Ltd** P.O. Box 3217 Rhodes NSW 2138 Australia	33136700 R7.1 date 23.02.2022	n/a	n/a
Warringtonfire Australia Pty Ltd	**HILTI (Aust.) Pty Ltd** P.O. Box 3217 Rhodes NSW 2138 Australia	FAS180439 RIR3.0 date 26.03.2021	n/a	n/a
Warringtonfire Australia Pty Ltd	**HILTI (Aust.) Pty Ltd** 203-205 Normanby Road South Melbourne VIC 32054 Australia	FAS180496A R1.3 date 31.12.2024	n/a	n/a